A Big Data and Online Health Analytics Framework Extended to Integrate Clinical and Countermeasure Decision Support

by

Jennifer Yeung

A thesis submitted to the
School of Graduate and Postdoctoral Studies in partial
fulfillment of the requirements for the degree of

Master of Science in Computer Science

Faculty of Science
University of Ontario Institute of Technology (Ontario Tech University)
Oshawa, Ontario, Canada

March 2022

THESIS EXAMINATION INFORMATION

Submitted by: **Jennifer Yeung**

Master of Science in **Computer Science**

Thesis title: **A Big Data and Online Health Analytics Framework Extended to Integrate Clinical and Countermeasure Decision Support**

An oral defense of this thesis took place on 12th of March, 2022 in front of the following examining committee:

Examining Committee:

Chair of Examining Committee	Dr. Patrick Hung
Research Supervisor	Dr. Carolyn McGregor AM
Examining Committee Member	Dr. Catherine Inibhunu
Thesis Examiner	Dr. Nadja Bressan, Adjunct Professor, Ontario Tech University and Assistant Professor, University of Prince Edward Island

The above committee determined that the thesis is acceptable in form and content and that a satisfactory knowledge of the field covered by the thesis was demonstrated by the candidate during an oral examination. A signed copy of the Certificate of Approval is available from the School of Graduate and Postdoctoral Studies.

ABSTRACT

Computing frameworks that utilize big data analytics to support Clinical Decision Support Systems (CDSS) have proven to impact human lives in applications on Earth and in space. In the application of Space Medicine Decision Support Systems (SMDSS) on ISS missions and future space missions to the Moon and Mars, there is no known methodology that supports the unique challenges of human physiology in microgravity where countermeasure activities are conducted to help astronaut adaptation to spaceflight. There exist challenges in data integration, data synchronization, and spacecraft-to-ground communication limitations. To help address these challenges, this thesis proposes a framework for SMDSS that extends an existing big data online health analytics platform, Artemis, to support Clinical and Countermeasure Decision Support Systems. This framework has been instantiated by extending the Artemis platform. This is demonstrated within the context of countermeasure activities on the International Space Station (ISS) and a firefighter cold stress training activity.

Keywords: *Space Medicine Decision Support System; Information Systems; Cloud Computing; Big Data Analytics; Online Health Analytics; Stream Computing; Clinical and Countermeasures Decision Support System; Intervention in Extreme Environments*

AUTHOR'S DECLARATION

I hereby declare that this thesis consists of original work of which I have authored. This is a true copy of the thesis, including any required final revisions, as accepted by my examiners.

I authorize the University of Ontario Institute of Technology (Ontario Tech University) to lend this thesis to other institutions or individuals for the purpose of scholarly research. I further authorize University of Ontario Institute of Technology (Ontario Tech University) to reproduce this thesis by photocopying or by other means, in total or in part, at the request of other institutions or individuals for the purpose of scholarly research. I understand that my thesis will be made electronically available to the public.

The research work in this thesis that was performed in compliance with the regulations of Research Ethics Board/Animal Care Committee under the following **REB Certificate numbers;** (#156-1718) from Durham College and (#14783) from Ontario Tech University.

Jennifer Yeung

STATEMENT OF CONTRIBUTIONS

I hereby certify that I am the sole author of this thesis. I have used standard referencing practices to acknowledge ideas, research techniques, or other materials that belong to others. Furthermore, I hereby certify that I am the sole source of the creative works and/or inventive knowledge described in this thesis. As part of this dissertation, several publications have been submitted and presented in conferences as follows;

Refereed Conference Publications

Inibhunu, C., **Yeung, J.**, Gates, A., Chicoine, B., & McGregor, C. (2021). A Decoupled Data Pipeline and its Reliability Assessment: Case Study in Extreme Climatic Humans Studies. *IEEE Big Data Conference BPOD*, 3075–3084.

Yeung, J., & McGregor, C. (2021). An Individualized Countermeasure Assessment Framework for Astronauts in Space. *IEEE Aerospace Conference*, 1–9.

Yeung, J., & McGregor, C. (2019). Analyzing countermeasure effectiveness utilizing big data analytics for space medicine decision support: A case study. *Proceedings of the International Astronautical Congress, IAC*, *October*, 21–25.

Yeung, J., & McGregor, C. (2018). Countermeasure Data Integration within Autonomous Space Medicine: An Extension to Artemis in Space. *IEEE Life Sciences Conference*, 251–254.

ACKNOWLEDGEMENTS

Learning about transdisciplinary research involving aerospace engineering, computer science, and medicine, changed my life and writing this thesis altered the course of my professional career. It expanded the dream of a little country girl out of British Columbia, who wanted to be more than an aerospace engineer and this thesis has made that possible. I would like to acknowledge the shoulder of giants that this work has been built upon. This thesis would not have been made possible without the passionate individuals before me who have made monumental innovation leaps in STEM.

I would like to give special thanks to Dr. Carolyn McGregor for her mentorship and support, which has helped fuel my Master's journey in more ways than one. Dear Carolyn, I am beyond grateful for your kindness and support. Thank you for the countless hours of chats and discussions, and in so doing, helped me bring this research work into fruition. Thank you for your confidence in me and your patience throughout this process. Your holistic teaching approach and consistent encouragement "to be kind to yourself" is refreshing and a true inspiration.

To everyone I had the fortune of meeting throughout my Master's at the Joint Research Centre for AI4HW (formerly, Health Informatics Research laboratory) at Ontario Tech University, University of Technology Sydney, Department of Health Western Australia, and the Pawsey Supercomputing Centre, I am sincerely thankful for the camaraderie, the learning opportunities and discussions, and best of all, the kind reminders that I was never alone.

Special thanks to the Pre-Service Firefighter, Education, and Training (PFET) program at Durham College, Dr. Michael Williams-Bell, and all participants of the Cold Stress Training Scenario Workshop, for providing data as secondary-use in the analogue case study. Without this, this thesis would not have been possible.

To my dearest family in Vancouver, words cannot begin to describe my gratitude for the roles everyone has played in this journey. A very special thank you to my sister, Mom, Dad, Grandma, my aunt, and my grandmum in Hong Kong. I am blessed to have your support in my seemingly never-ending road to education and knowledge discovery. Finally, I would like to acknowledge the four female pillars of my life: Mom, GuGu, MaMa, and PoPo. Always available at the other end of the phone line, you all have taught me strength and resilience and I am so honored to be raised by such powerful women. Instilled in me is a strong mind and a solid work ethic, giving me the power to reach for the Moon, land amongst the stars, and maybe even Mars.

TABLE OF CONTENTS

LIST OF TABLES

LIST OF FIGURES

LIST OF ABBREVIATIONS

ACMS	Advanced Crew Medical System
ARED	Advanced Resistive Exercise Device
API	Application Program Interface
BP	Blood Pressure
CEVIS	Cycler Ergometer Vibration Isolation and Stabilization
CRISP-TDM	Cross Industry Standard Process for Data Mining
CSA	Canadian Space Agency
CoRAD	Cohort Relatively Aligned Dashboard
ECG	Electrocardiogram
EMR	Electronic Medical Record
EVA	Extra Vehicular Activity
HAaaS	Health Analytics as a Service
HRV	Heart Rate Variability
IBMP	Institute of Biomedical Medicine
IMedS	Integrated Medical System
IMG	Integrated Medical Group
IOM	Institute of Medicine
IoT	Internet of Things
ISS	International Space Station
LEO	Low Earth Orbit
MCC	Mission Control Centre
ML	Machine Learning
MMPB	Multilateral Medical Policy Board
NICU	Neonatal Intensive Care Unit
NRC	National Research Council
PHM	Prognostic Health Management
SANS	Spaceflight Associated Neuro-ocular Syndrome
SDRaaS	Space Data Relay as a Service
SDNN	Standard Deviation of Normal-to-Normal intervals
SLD	Subject Load Device
SMDSS	Space Medicine Decision Support System
SpO_2	Blood Oxygen Saturation
$STDM^n{}_0$	Service-based multi-dimensional Temporal Data Mining
VIS	Vibration Isolation and Stabilization

Chapter 1. Introduction

1.1 Overview

This thesis presents an extension to a big data framework that integrates countermeasure activity data and countermeasure derived data within a feedback loop. The application context for this framework is set within the field of space medicine, and this research aims to effectively extend a Space Medicine Decision Support System (SMDSS) to enable real-time individualized assessments that include impact of countermeasure activities conducted by astronauts in space. This thesis contributes to the areas of information and computing systems theory, health informatics, and space medicine.

1.2 Background

Exploring the unknown depths of space has motivated incredible technologic advancements to human spaceflight since the first one-crew flight in 1961 [1]. Microgravity, increased radiation exposure, isolated and confined living conditions, whilst conducting mission-focused tasks and performing experiments on the International Space Station (ISS) presents an extreme environment within a crewed system in space. As such, human space travel is a high-risk endeavor to the individual physiology, health, and well-being of astronauts. A focus on physiological impacts due to spaceflight will be discussed within the scope of this thesis.

Space-induced physiological changes are complex and various systems of the body are affected including the cardiovascular system, musculoskeletal system, immune-endocrine system, metabolic system, and visual system. As an example, microgravity presents an environment that forces redistribution of body fluid from lower extremities of the body to the upper parts. This can manifest in symptoms in the form of headaches, puffy face, nausea, joint and back pains, and sensory disturbances. Some symptoms may be temporary for individuals during the adaptation period in space or until a "new normal" (a physiological state known as homeostasis) is adapted, while other symptoms result in physiological changes that have longer term implications, such as visual acuity, skeletal muscle atrophy, bone demineralization, space anemia, renal stone risk factors, and urinary disturbances as a result of metabolic derangements [2].

To counter such adverse effects of space, astronauts on the International Space Station (ISS) conduct a regimen of countermeasure activities and preventive measures based on guidance from the Multilateral Medical Policy Board (MMPB), which include operational efforts between the Integrated Medical Group (IMG) that comprises of international medical experts distributed among active Mission Control Centers (MCC) and the Integrated Medical System (IMedS) onboard the ISS [1]. As part of the IMedS, there are three exercise machines that enables countermeasure exercises: the BD-2 Treadmill (hereinafter referred to as treadmill), the Cycle Ergometer with Vibration Isolation and Stabilization (CEVIS) device, and the Advanced Resistive Exercise Device (ARED). The treadmill that was first installed on the ISS in 2009 enables astronauts to conduct exercises to help maintain muscle and bone health. A system of bungee cords

and Subject Load Device (SLD) harness keeps the user on the running surface in microgravity and the Vibration Isolation and Stabilization (VIS) system limits movement of motion to minimize forces transferred from the treadmill to the structure of the ISS Service Module that the equipment is housed in [3]–[6]. The CEVIS device, first installed in early 2001, enables aerobic and cardiovascular conditioning cycling activities and allows configuration of the user in a recumbent (leaning back) or upright position [6], [7]. Finally, the ARED with its first iteration installed in early 2009, provides load and weight-simulated training exercises to help maintain muscle strength and bone mass. It is an adjustable resistance exercise device that employs piston-driven vacuum cylinders for constant resistance and a flywheel assembly to simulate the inertial forces of free weights [6], [8], [9]. This thesis focusses on the countermeasure equipment onboard the ISS that are used to help counter the adverse effects of space and the physiological, mechanical, and data that is captured. The detection and integration of data currently captured from countermeasure equipment have the potential to enable real-time intervention to help astronauts counter long-term effects of spaceflight [10].

The countermeasure training equipment enables data collection of: physiological data parameters such as heart rate (HR) and blood pressure (BP), data parameters from the equipment (hereinafter classified as mechanical data) such as tread speed and load volume, and other data of manual input such as specific activity and equipment issues [11]. In addition, the other sub-systems of the IMedS generate data that pertain to radiation control, environmental control, and the assessment of toxicology and microbiology in the quality of air, surfaces, and water [1]. As countermeasures are

conducted to counter adverse health risks, there is great potential in combining physiological monitoring along with countermeasure monitoring within a closed-loop environment that is the ISS. However, limitations exist in designing holistic frameworks that are inclusive of the high volume, high velocity, and high variety of data production from sensor devices including those of countermeasure devices.

With space travel extending beyond low Earth orbit (LEO) to the Moon and Mars for two- to three-year missions, plans for future long duration missions necessitates the requirement to advance countermeasures to maintain the health and safety of crew members [12]. However, health monitoring on the ISS to date is discontinuous. Countermeasure data transmission require manual upload to the space station's computer and the data collected is downlinked to MCC retrospectively for further data analysis [3], [7]–[9]. Health reports and countermeasure guidance consists of only once-a-week reviews by an exercise specialist [9]. Furthermore, subtle physiological changes in microgravity may also occur during periods of inactivity such as sleep or down-time [13]. Research has shown that findings in the subtle behaviors of physiological data has the potential for early onset condition detection for populations also other than astronauts in extreme environments [14]. As adaptation in microgravity involves physiological changes that can occur second-by-second and these changes can occur during countermeasure activities and during performance of mission-related tasks, the lack of this data collection currently hinders the potential of extending human spaceflight. As such, current approaches to individualized health monitoring and countermeasure assessments are insufficient to support humans on future long duration spaceflight and

the potential to leverage existing countermeasure data with space medicine theory to derive new knowledge in future countermeasure regimens is presented.

Real-time health monitoring in the closed-loop environment of a human system such as that of the ISS presents a big data challenge due to high volume, high frequency (velocity), and high variety data production from sensor devices that collect data from humans and the environment [15]. Towards addressing the real-time streaming limitations of autonomous and continuous health monitoring, a robust online health analytics platform known as Artemis was proposed in 2013 to support astronaut health monitoring in space [16]. Motivated by its proven relevance in supporting clinical decision-making in hospitals in real-time, Artemis is a multi-patient, multi-diagnosis, and multi-stream online health analytics platform enabled by big data analytics and stream computing. The information systems framework that Artemis is instantiated from consisted of components for data acquisition, online analysis, data persistency, knowledge extraction, results presentation, along with deployment and re-deployment on the spacecraft of interest. The components for stream persistency, knowledge extraction, and redeployment are mirrored at ground control. Since then, that framework has evolved to include components with integrated theories in prognostic health management [17] and heart rate variability [18], [19] which demonstrated the applicability of utilizing big data analytics in the field of space medicine [20]. More specifically, these advancements also included the creation of a real-time streaming adaptive Application Program Interface (API) within cloud and edge computing paradigms for deployment design considerations of continuous health monitoring platforms for

patients in rural and remote locations and for populations who undergo adaptation and resilience training [21]–[23]. Data transmission from deep space also presents network communication challenges. The utilization of a space network to support optical transmission with a CommStar satellite component nearer to the moon and satellites around Earth known as the HALO was recently proposed to extend Artemis's framework to support Space Data Relay as a Service (SDRaaS) [24]. However, there is no big data and online health analytics framework to date that incorporates a feedback mechanism to support a clinical and countermeasure decision support system that provides individualized intervention assessments. This thesis presents a framework that extends the prior framework to enable real-time health monitoring for when countermeasure exercises are performed by the active space crew on any long duration space mission. This framework extends the existing framework that is instantiated within the existing Artemis platform to enable physiological and countermeasure data acquisition, processing, and analysis within Artemis's cloud-based system. A method to demonstrate the proposed framework will then be presented utilizing Artemis's sister platform, Athena, to assess individual HRV per activity segment through an analogue mission example. This approach focusses on the individualized assessments per countermeasure activity performed by firefighters in a simulated extreme cold environment scenario.

Ground-based astronauts in training, parabolic flight crews, and flight test pilots also experience extreme environmental conditions including weightlessness and high gravitational forces. These conditions can be simulated in various terrestrial space analogues, simulation facilities, and climate chambers. Experience with these activities

expose individuals to environments that are drastically different from regular everyday Earth-based conditions that their bodies are accustomed in, and therefore require constant adaptation within those simulation environments. Furthermore, they must perform tasks and conduct training exercises that require optimal physiological performance.

Terrestrial populations such as first responders are susceptible to environments that require adaptation also. For public safety professions such as firefighting, mental and physical challenges exist due the nature of tasks and extreme environmental exposure. Similar to countermeasures for astronauts that counter effects of microgravity, resilience training is an important preventive activity to help firefighters ensure their safety, health, and wellness. The framework outlined in this thesis will be instantiated in a case study to demonstrate implications of correlating heart rate data to countermeasure activities conducted in a Cold Stress Roof Ventilation Training Workshop scenario utilizing data acquired from firefighter students from the Durham College Pre-Service Firefighter, Education, and Training (PFET) program [23]. This case study will serve as a terrestrial analogue to demonstrate the potential of this framework instantiated in continuous health monitoring technology.

The physiological response to countermeasure activities differs for each individual astronaut and broadly between biological sexes. There is no standard countermeasure regimen used by crew members in space as regimens are dependent on the astronaut's home agency. It is therefore noteworthy to consider integrating an individualized approach within an autonomous online health analytics platform for continuous health

monitoring in long duration spaceflight. Although there are frameworks with the capability to ingest relevant countermeasure and environmental data, the unique adaptative mechanisms that occur in relation to the specific activity performed for each astronaut is not currently assessed in a framework. This thesis serves to address these gaps and current design limitations to big data analytics frameworks with a focus on providing autonomous and remote health monitoring in the field of space medicine.

1.3 Research Questions

This thesis aims to answer the following research questions:

- Can a method to integrate countermeasure data within a big data health analytics platform for an individualized approach to countermeasure and intervention assessment be created?
- Can this method and platform be applied and demonstrated in the context of firefighters conducting countermeasure activities in an extreme environment?
- Can this method be used as an analogue to demonstrate an extended Space Medicine Decision Support System (SMDSS) for monitoring astronaut health and exercises in space?

1.4 Research Objectives

To answer the first research question, the first objective of this research aims to develop a method by extending existing big data health analytics frameworks to enable individualized countermeasure assessments as well as to enable continuous health and intervention monitoring and assessment. A process within this methodology has been designed to integrate data generated by individuals conducting countermeasure and intervention activities. As such, a feedback mechanism within this proposed framework is enabled by derived analytics concerning the health and physiology of the individual near real-time to allow the individual to perform interventions in their activities as necessary. Currently, analytics that are derived from existing frameworks are not known to be processed back into the framework to allow individuals to assess any interventions that is conducted. The integrated feedback mechanism proposed in this thesis aims to ultimately advance knowledge and understanding on physiological impact of countermeasures and interventions in remote and extreme environments.

The second objective of this thesis aims to answer the second research question by demonstrating the ability of the proposed framework in the context of firefighters conducting countermeasure activities in a simulated extreme cold environment. This method will instantiate the proposed framework within the existing big data health analytics platform, Artemis, to enable individualized assessments of separate countermeasure activity segments that was performed. To do this, this method will correlate physiological data with separate countermeasure activity segments building

individualized assessments within a countermeasure and intervention decision support system.

In extreme environments, individual homeostasis is affected as adaptation is required to adapt to the external environment. Due to the physiological effects of microgravity in space, astronauts on current ISS expeditions conduct exercises on countermeasure equipment which also currently capture data generated. However, as this data is currently captured and analyzed retrospectively and the effect of these countermeasure regimens on human physiology on future longer duration missions remain unknown, there is immense potential to leverage big data health analytics frameworks that integrate countermeasure information to enable autonomous medical care in space. The third objective of this thesis aims to answer the third research question extended from the second objective to demonstrate this proposed framework as an advanced SMDSS in a terrestrial-based extreme environment. This methodology is described as an analogue, capable of monitoring astronaut health and countermeasure activities autonomously in space and remotely from ground control. Consequently, the implications of the framework modelled in this thesis could also be vital in providing autonomous health and intervention monitoring for individuals in rural communities and remote locations.

1.5 Research Methodology

To achieve the research objectives outlined in the previous sub-section, the constructive research method outlined in [25] is adopted for this thesis. The principles of this research method are presented as a bottom-up approach which follows a structured path from constructive research to transdisciplinary innovation. This process follows a structured phased approach as follows:

1. First, the research presented a need for continuous health and wellness monitoring toward Space Medicine Decision Support (SMDS) systems including big data analytics systems that can acquire physiological information from users susceptible to extreme environments such as space. The research also found a myriad of countermeasure devices and equipment that captures a range of data that is user induced when the equipment is in use to help counter and mitigate effects of space. These systems and devices are not currently integrated into any big data analytics framework for continuous health monitoring to account for possible immediate interventions that can be conducted to improve the astronaut's health trajectory in their adaptation processes. There is research potential in the development of a method to incorporate countermeasure data in real-time to determine and analyze different physiological responses to different activities or exercises performed.

2. It is evident that the research aims to understand individualized health assessment approaches correlated with activities conducted. To obtain a comprehensive understanding of this topic, two reviews were conducted to:

a. Understand the current state of knowledge in big data frameworks, architectures, and platforms used for real-time physiological monitoring;

b. Understand current methods used for big data analytics to analyze and assess adaptation training, countermeasures, and preventive activities in extreme environments such as space;

c. Understand health and medical issues in space that require medical and physiological adaptation and the current countermeasures and exercise activities that are conducted by astronauts on the ISS

3. Once the research gaps were identified in the comprehensive reviews, this research could then address the underlying gaps in the lack of countermeasure integration in big data frameworks for continuous health monitoring in extreme environments, as well as the lack of feedback mechanisms within big data architectures to provision analytics derived analytics toward countermeasure and intervention decision support systems. As such, these research areas were identified, key contributions were formulated, and a solution was constructed.

4. The feasibility of this solution will be demonstrated in two case studies. The first case study demonstrates this solution within the Artemis architecture in the application of existing technologies on the ISS. The second case study demonstrates this solution in an analogue case study, which utilizes data collected from firefighter participants who trained in a simulated extreme cold stress training workshop.

5. Theoretical connections and research contributions is then drawn from the solution concepts in discussions within both case studies.

6. The scope of applicability in this research solution demonstrates great potential for utilizing big data analytics for continuous health monitoring in a range of different settings. While this framework aims to for human space travel, the proposed framework may also be leveraged to support terrestrial applications requiring autonomous and remote healthcare and performance monitoring, such as training applications for members in populations who are susceptible to extreme environments that require adaptation (for example, members of the police force, tactical operators, military personnel, firefighters, tri-athletes, and mountaineers).

A tabulated summary of these phases is presented in the Table 1-1:

Table 1-1 – Adoption of the Constructive Research Approach to create a methodology to integrate Clinical and Countermeasure Decision Support in SMDSS

Phase	***Constructive Research***	***Integrating Clinical and Countermeasure Decision Support in Space Medicine Decision Support Systems (SMDSS) Constructive Research***
Phase 1	*Find a practically relevant problem which has research potential*	Information system frameworks for continuous health monitoring provide valuable knowledge, particularly in the field of medicine. Within an extreme environment such as space, SMDSS have great potential to leverage big data analytics to safely extend human space travel. However, knowledge in space medicine and countermeasure effects on physiology in long duration spaceflight remains largely unknown. In addition, existing big data analytics frameworks for continuous health monitoring systems do not incorporate derived analytics as a feedback to account for possible immediate interventions to improve an individual's health trajectory in an environment that requires adaptation. *(Phase 1 continued on next page)*

Phase	*Constructive Research*	***Integrating Clinical and Countermeasure Decision Support in Space Medicine Decision Support Systems (SMDSS) Constructive Research***
		Research Questions: ◆ Can a method to integrate countermeasure data within a big data health analytics platform for an individualized approach to countermeasure and intervention assessment be created? ◆ Can this method and platform be applied and demonstrated in the context of firefighters conducting countermeasure activities in an extreme environment? ◆ Can this method be used as an analogue to demonstrate an extended Space Medicine Decision Support System (SDMSS) for monitoring astronaut health and exercises in space?
Phase 2	*Obtain a general and comprehensive understanding of the topic*	It is evident that the research aims to understand individualized health assessment approaches correlated with activities conducted. To obtain a comprehensive understanding of this topic, two reviews were conducted to: ◆ Understand the current state of knowledge in big data frameworks, architectures, and platforms used for real-time physiological monitoring; ◆ Understand current methods used for big data analytics to analyze and assess adaptation training, countermeasures, and preventive activities in extreme environments such as space; ◆ Understand health and medical issues in space that require medical and physiological adaptation and the current countermeasures and exercise activities that are conducted by astronauts on the ISS
Phase 3	*Innovate (i.e., construct a solution idea)*	**Contribution to Computer Science:** Extend an existing framework within the Artemis platform to incorporate a feedback mechanism that enables derived analytics for countermeasure and intervention decision support activities **Contribution to Health Informatics**: Create a holistic framework that supports individualized health assessments in a countermeasure and intervention decision support system **Contribution to Space Medicine**: Create an integrated countermeasure and intervention decision support system within an existing space medicine decision support framework for astronauts in space *(Phase 4 continued on next page)*

Phase	***Constructive Research***	***Integrating Clinical and Countermeasure Decision Support in Space Medicine Decision Support Systems (SMDSS) Constructive Research***
Phase 4	*Demonstrate the solutions feasibility*	The proposed extension to an existing big data analytics framework will include the creation of a feedback mechanism to integrate countermeasure and intervention data toward providing individualized health assessments for astronauts in space. The feasibility of this proposed framework will be demonstrated in an analogue that integrates countermeasure data from firefighters within a terrestrial case study.
Phase 5	*Show theoretical connections and research contribution of the solution concept*	**First Case Study:** The proposed extended framework will be instantiated through the Artemis platform which has been demonstrated to support a SDMSS in space. This methodology will integrate data ingestion from countermeasure devices as well as derived data analytics to enable Clinical and Countermeasure Decision Support within exiting SMDSSs. **Second Case Study:** The proposed framework will be demonstrated in a terrestrial-based analogue as a case study to integrate countermeasure data from firefighters conducting countermeasure activities in a simulated extreme cold stress training scenario. In both case studies, the creation of this extended framework aims to provide individuals within an extreme environment with the opportunity for immediate intervention activities, as necessary.
Phase 6	*Examine scope of applicability of the solution*	The scope of applicability in this research solution demonstrates great potential for utilizing big data analytics for continuous health monitoring in a range of different settings. While this framework aims to for human space travel, the proposed framework may also be leveraged to support terrestrial applications requiring autonomous and remote healthcare and performance monitoring, such as training applications for members in populations who are susceptible to extreme environments that require adaptation (for example, members of the police force, tactical operators, military personnel, firefighters, tri-athletes, and mountaineers).

1.6 Thesis Structure

This thesis is structured as follows:

- Chapter 2 provides a comprehensive literature review of computing science theories detailing utilization of big data analytics within existing information system frameworks, architectures, and platforms for continuous health monitoring;
- Chapter 3 provides a contextual review of the need for autonomous medical care for astronauts in space, physiological effects due to spaceflight, current measures conducted to counter those effects, existing SMDSS, and existing utilization of physiological data for health and stress response assessments;
- Chapter 4 details the proposed framework that extends the Artemis platform to incorporate Countermeasure and Intervention Decision Support, including details of components at the Remote Location as well as at the Clinical Management Center;
- Chapter 5 presents this extended framework instantiated in the Artemis platform in the context of monitoring astronauts onboard the ISS. A methodology is described to integrate existing countermeasure devices to extend SDMSS to include Clinical and Countermeasure Decision Support in space and from Mission Control. Discussion of this case study are also presented in this chapter;
- Chapter 6 presents this extended framework in an instantiation of the Artemis platform in a terrestrial case study with a firefighter population in an extreme cold

stress training workshop. This case study is presented as a technological analogue to demonstrate capabilities of the proposed framework for use in space. Results of this analogue case study will be discussed in this chapter;

- Chapter 7 presents a summary, concluding remarks on research contributions, limitations and future work related to work presented in this thesis, and concluding statements.

REFERENCES

[1] V. V. Bogomolov, I. B. Kozlovskaya, I. V. Alferova, a. D. Egorov, and I. V. Kovachevich, "Medical care for Russian cosmonauts on board the ISS," *Hum. Physiol.*, vol. 36, no. 7, pp. 766–772, 2010, doi: 10.1134/S0362119710070054.

[2] P. D. Hodkinson, R. A. Anderton, B. N. Posselt, and K. J. Fong, "An overview of space medicine," *Br. J. Anaesth.*, vol. 119, pp. i143–i153, 2017, doi: 10.1093/bja/aex336.

[3] M. Murray, "Treadmill with Vibration Isolation and Stabilization System (TVIS)," 2021. https://www.nasa.gov/mission_pages/station/research/experiments/explorer/Investigation.html?#id=949 (accessed Nov. 16, 2021).

[4] I. B. Kozlovskaya and A. I. Grigoriev, "Russian system of countermeasures on board of the International Space Station (ISS): The first results," *Acta Astronaut.*, vol. 55, no. 3–9, pp. 233–237, 2004, doi: 10.1016/j.actaastro.2004.05.049.

[5] E. V. Fomina, A. O. Savinkina, and E. N. Yarmanova, "Ground reaction force values in cosmonauts during locomotor exercises on board the International Space Station," *Hum. Physiol.*, vol. 43, no. 5, pp. 542–548, 2017, doi: 10.1134/S0362119717050048.

[6] K. J. Hackney, J. M. Scott, A. M. Hanson, K. L. English, M. E. Downs, and L. L. Ploutz-Snyder, "The Astronaut-Athlete: Optimizing Human Performance in Space," *J. Strength Cond. Res.*, vol. 29, no. 12, pp. 3531–3545, 2015, doi: 10.1519/JSC.0000000000001191.

[7] P. Truong, "Cycle Ergometer with Vibration Isolation and Stabilization (CEVIS) System (CEVIS)," 2021. https://www.nasa.gov/mission_pages/station/research/experiments/explorer/Investigation.html?#id=821 (accessed Nov. 16, 2021).

[8] C. W. Burkhart, "Advanced Resistive Exercise Device (ARED)," 2021. https://www.nasa.gov/mission_pages/station/research/experiments/explorer/Investigation.html?#id=973 (accessed Nov. 16, 2021).

[9] N. Petersen *et al.*, "Exercise in space: The European Space Agency approach to in-flight exercise countermeasures for long-duration missions on ISS," *Extrem. Physiol. Med.*, vol. 5, no. 1, pp. 1–13, 2016, doi: 10.1186/s13728-016-0050-4.

[10] J. Yeung and C. McGregor, "Countermeasure Data Integration within Autonomous Space Medicine: An Extension to Artemis in Space," in *IEEE Life Sciences Conference*, 2018, pp. 251–254.

[11] J. Yeung and C. McGregor, "Analyzing countermeasure effectiveness utilizing big data analytics for space medicine decision support: A case study," *Proc. Int. Astronaut. Congr. IAC*, no. October, pp. 21–25, 2019.

[12] National Aeronautics and Space Administration, "Bioastronautics Roadmap - A Risk Reduction Strategy for Human Space Exploration," no. February, 2005.

[13] G. Petit *et al.*, "Local sleep-like events during wakefulness and their relationship to decreased alertness in astronauts on ISS," *npj Microgravity*, vol. 5, no. 1, 2019, doi: 10.1038/s41526-019-0069-0.

[14] C. McGregor, C. Catley, and A. James, "Variability analysis with analytics applied to physiological data streams from the neonatal intensive care unit," *Proc. - IEEE Symp. Comput. Med. Syst.*, pp. 1–5, 2012, doi: 10.1109/CBMS.2012.6266385.

[15] C. McGregor, A. James, M. Eklund, D. Sow, M. Ebling, and M. Blount, "Real-time multidimensional temporal analysis of complex high volume physiological data streams in the neonatal intensive care unit," *Stud. Health Technol. Inform.*, vol. 192, no. 1–2, pp. 362–366, 2013, doi: 10.3233/978-1-61499-289-9-362.

[16] C. McGregor, "A platform for real-time online health analytics during spaceflight," *IEEE Aerosp. Conf. Proc.*, 2013, doi: 10.1109/AERO.2013.6497382.

[17] C. McGregor, "A framework for online health analytics for advanced prognostics and health management of astronauts," *Aerosp. Conf. 2015 IEEE*, pp. 1–7, 2015, doi: 10.1109/AERO.2015.7119301.

[18] R. M. Baevskii, "Analysis of heart rate variability in space medicine," *Hum. Physiol.*, vol. 28, no. 2,

pp. 202–213, 2002, [Online]. Available: http://link.springer.com/article/10.1023/A:1014866501535.

[19] A. Prysyazhnyuk, C. McGregor, A. Chernikova, and V. Rusanov, "A sliding window real-time processing approach for analysis of heart rate variability during spaceflight," *Proc. Int. Astronaut. Congr. IAC*, vol. 2019-Octob, no. October, pp. 21–25, 2019.

[20] C. Inibhunu, R. Jalali, I. Doyle, A. Gates, J. Madill, and C. McGregor, "Adaptive API for Real-Time Streaming Analytics as a Service," *41st Int. Eng. Med. Biol. Conf.*, pp. 3472–3477, 2019.

[21] C. McGregor, B. Bonnis, B. Stanfield, and M. Stanfield, "A method for real-time stimulation and response monitoring using big data and its application to tactical training," *Proc. - IEEE Symp. Comput. Med. Syst.*, vol. 2015-July, pp. 169–170, 2015, doi: 10.1109/CBMS.2015.44.

[22] C. McGregor, F. M. Williams-Bell, and B. Bonnis, "Using Streaming Big Data for Resilience Assessment within Pre-service Firefighter Extreme Condition Training," *9th Annu. Mil. Veteran Heal. Res. Forum*, p. 29, 2018.

[23] C. McGregor, F. M. Williams-Bell, and B. Bonnis, "Extreme Climate Pre-Deployment Acclimation Resilience Assessment Using Climate Chambers and Big Data," *10th Annu. Mil. Veteran Heal. Res. Forum*, p. 87, 2019, doi: 10.3233/PRM-170430.

[24] C. Mcgregor, "A Platform for Real-Time Space Health Analytics as a Service Utilizing Space Data Relays," 2021.

[25] C. McGregor, "Using Constructive Research to Structure the Path to Transdisciplinary Innovation and Its Application for Precision Public Health with Big Data Analytics," *Technol. Innov. Manag. Rev.*, vol. 8, no. 8, pp. 7–15, 2018, doi: 10.22215/timreview/1174.

Chapter 2. Literature Review – Computing Science Theory

This chapter presents the foundations of information system frameworks theory for continuous health monitoring in support of the first research question. The theory of big data and development of IoT systems within paradigms of edge and fog computing will be introduced to further motivate the work proposed in this thesis. Frameworks that support big data analytics will be discussed in this chapter with a concluding introduction to an Online Health Analytics platform known as Artemis, which the framework proposed in this thesis is built upon.

The literature review methodology within this thesis adopted a systematic approach in the collection of literature in two thematic areas that form the theoretical foundations of the work proposed in this thesis: 1) Frameworks of Information Systems within the domain of Computer Science for Continuous Health Monitoring and 2) Countermeasure Decision Support Systems within the field of Space Medicine. As such, this literature review was conducted in two parts. This chapter reviews the Computing Science areas of information system frameworks for continuous health monitoring and discusses the concepts of big data analytics and computing platforms. Chapter 3 is a contextual review of Space Medicine and Autonomous Medical Care for Long Duration Spaceflight.

2.1 Information System Frameworks for Continuous Health Monitoring

Continuous health monitoring technologies in healthcare have advanced significantly since the invention of the cardiotachoscope for surgery in 1950 [1]. Physiological bedside monitoring in most urban hospitals now include a myriad of devices most of which can be connected to a central monitoring system, or hub, in a centralized station for ease of patient monitoring and observation by clinical staff. Furthermore, existing monitoring devices generate data values from parameters such as heart rate, respiratory rate, and blood oxygen saturation levels that enable clinicians to derive meaningful diagnostics or prognostics information pertaining to patient health.

However, data that is continuously generated second-by-second per individual patient cannot be monitored manually. Medical records are still recorded manually with each physiological parameter usually summarized in one value per 30- or 60- minute intervals, resulting in significant data loss [2]. Efforts in leveraging computing technologies within health organizations such as that of the Technicon Medical Information System (TMIS) deployed in 1971 at the El Camino Hospital in Mountain View, California, though has demonstrated that machinery approached from a systems perspective may be utilized to better serve its clinical users. The challenges of technological flaws in human-machine interactions, including changes in work flow processes, and social/cultural factors remain at large [3]. It is evident that within a healthcare context that is human-centric and complex in nature, an effective medical health information system that align human users within a healthcare organization with its technologies is crucial in healthcare services and systems.

Modern capabilities for continuous health monitoring continue to give rise to the need for information systems and multi-component platforms to make use of the data collected. This motivated a systemic approach to theoretically contextualize information systems and processes into frameworks, particularly in environments requiring adaptation and resilience monitoring [1]. Human factors within such frameworks motivate the need to establish a structured approach to enable data to give meaning and context in order for the user to derive information and meaningful knowledge. As such, the need to describe systems through Information System Frameworks is required.

Information System Frameworks consist of components which each serve specific functions that are designed synchronously to direct and guide work tasks for a seamless implementation. Frameworks can be instantiated in platforms as a form of architecture to meet requirements and objectives. Data Warehouse frameworks and architecture have been widely adopted since 1980 by industries involved with transactional businesses to support decision making [1]. In 2002, data warehouse framework principles and proposed components for data management and storage, model management, and user interfaces were extended to access data and models that incorporated physiological data streams [4]. That framework was instantiated within an e-baby platform proposed by McGregor et al in a Neonatal Intensive Care Unit (NICU) case study [4]. In the years that followed, that framework evolved extensively to one that is highly available and reliable, and one of which encapsulates components, particularly for big data collection and acquisition, data buffering and transmission, data transformation, data analytics, (re)deployment, data storage/ persistency, and information exploration (results presentation) [5]–[9].

Within the context of physiological monitoring and improving healthcare services, an online big data analytics platform known as the Artemis platform has demonstrated capabilities of that framework to enable multi-stream, multi-patient, multi-dimensional online analytics provisioned with Streams computing in the NICU [6], [10]–[14]. Within the context of supporting resilience and adaptation training, the Athena platform, which was created as an extension of Artemis, has demonstrated its capabilities to enable analytics to assess resilience of individuals to external stressors through HR and respiration parameters in tactical training exercises and games [15]. Some of these exercises have included the integration of information from virtual reality games and wearable garments such as Zephyr BioMonitors by Medtronic and Hexoskin by Carre Technologies during extreme climatic simulation scenarios [16]–[21].

Presented as a closed-loop environment where those scenarios were described in, Artemis is detailed as a fully integrated platform that encapsulates data collection from multiple sources including physiological, climate, and Excel and HTML web forms for activities or events tracking. Within such closed-loop environments, control parameters such as adjustments to environment temperature, physiological conditioning (exercise), and training activities are conducted which intervene with participants who are subject to acclimation and adaptation to the external environment. However, the framework lacked the inclusion of a feedback mechanism for controlled environments such those scenarios described. The utilization of continuous health monitoring may provision users with information on the health impact of their training activities, which may ultimately impart knowledge based on the current intervention activities that may impact their long-

term health trajectory as well. Artemis as an online health analytics platform will be discussed further in the next section as it provides the foundation for the framework presented in this thesis.

2.2 Big Data Analytics and Computing Platforms

Big Data is a computing paradigm that recognizes the monumental amount of data that 1) can be collected at high speeds (velocity), that 2) is diverse from various data sources (variety), and that 3) the data can be stored in highly structured or unstructured ways (volume) [22]. Hereinafter termed 'big data', this computing paradigm can be combined with the ability to connect devices within an Internet of Things (IoT) system. Cloud computing platforms utilize theorems in edge and fog computing which has further fueled mass data collection, recording, data processing and storage, and multi-source stream computing toward deriving analytics with big data [23].

Provisioned with components designed for real-time processing, computing platforms have the ability to buffer and transmit data streams from sensors and transform and process multiple data streams, thereby preparing the data for downstream knowledge discovery operations [24]. Within these platforms, noise and irrelevant data points, known as artefacts, may be removed in preparation of the data for downstream consumption. Learning models deployed within the analytics framework can then enable descriptive, predictive, prescriptive, and preventive knowledge-based analytics depending on the field application [24]. Furthermore, architectures within edge or fog

computing for sensor device connectivity, data preparation, disseminating information, and deriving knowledge based on integrated big data is now widely adopted across many industries, particularly in the healthcare field where the capability to monitor the wellbeing of multiple patients is highly valuable.

In the context of medicine and healthcare delivery, high volumes of data are continuously generated by medical monitoring devices. A variety of devices that enable data collection within computing platforms include physiological parameters such as, heart rate (HR) at 1 Hz, respiratory impedance (RI) waveform at 62.5 Hz, blood oxygen saturation (SpO_2) at 1 Hz, mean blood pressure (MBP) at 1 Hz, systolic blood pressure (SBP) at 1 Hz and diastolic blood pressure (DBP) at 1 Hz, respiratory rate (RR) at 1 Hz, and carbon dioxide (CO_2) waveform at 62.5 Hz [25], [26]. As long as these sensors are connected to a power source, these continuous data streams are generated. One common physiological data stream that is often captured at the bedside is the electrocardiogram (ECG). As an example, the Phillips IntelliVue bedside monitoring device is capable of sampling 512 readings per second to construct an ECG [12]. The rate needed to get a reasonable construction of an ECG trace is about 200 Hz for an adult and 400 Hz for a neonate. Frequencies from 500 to 1000 Hz may also be used within the neonatal space [6], [12]. Electrical brain activity monitoring with an electroencephalogram (EEG) may include as many as 14 streams of EEG at 1000 Hz per stream [27]. Simultaneous heart activity monitoring of the patient with an ECG that may include up to 12 channels of ECG with three streams of intravenous blood pressure (iBP) monitoring, each at 1000 Hz, in addition to any other devices that might produce raw or derived data streams (heart rate,

blood pressure, blood oxygen saturation, each at 1 Hz) in real-time. While some devices provide values for monitoring patient physiological states, others provide support such as, breathing ventilators and infusion pumps that provide medication, fluids, and/or nutrition. Combined with other monitoring devices that generate data at rates of up to 1000 samples per second per sensor, approximately 86.4 million readings per day per patient can be collected [12].

In addition to physiological data streams, patient data relating to their age, weight, gender, and lifestyle habits that may influence clinical outcomes may also be collected to enable big data analytics. Effectively, the value in big data is the "patterns that can be derived by making connections between pieces of data, about an individual, about an individual in relation to others, about groups of people, or simply about the structure of information itself" [28]. Medical devices have typically been designed to have a rolling memory of 72 hours, after which the oldest data is wiped from memory. This demonstrates an immense potential for analytics deployment in healthcare settings, however, a big data challenge is presented in terms of volume, bandwidth availability, storage, and high-speed processing in real-time which require additional resources.

Analytics that enable useful features to be extracted from processed data streams also enables the development of quality learning models. By leveraging Artificial Intelligence (AI) and Machine Learning (ML) theorems such as temporal data mining techniques, knowledge discovery operations that include classification, clustering, regression modelling, and finding association rules among datasets within a computing platform can generate useful knowledge and meaningful information [12], [29]–[33].

However, at high velocity and high volumes, big data streaming requires extensive bandwidth availability, advanced mitigation mechanisms for data latency, and scalable data storage solutions all of which require reliable service solutions which can be very costly.

Edge (or fog) computing is a computing paradigm that has been commonly leveraged in attempts to address these challenges by temporarily storing data on local devices, which then removes the need for distributed data centers. This helps to improve speed of access allowing for greater flexibility and real-time interaction for downstream consumption of data streams [24]. As such, a cloud platform that employs a cloud and edge computing architecture for multi-streaming devices within an IoT system has great potential, particularly in the application of healthcare delivery in remote and low-resource settings such as one described in [23]. In that work, the paradigms of edge and cloud computing theories were built into a de-coupled framework instanced in the

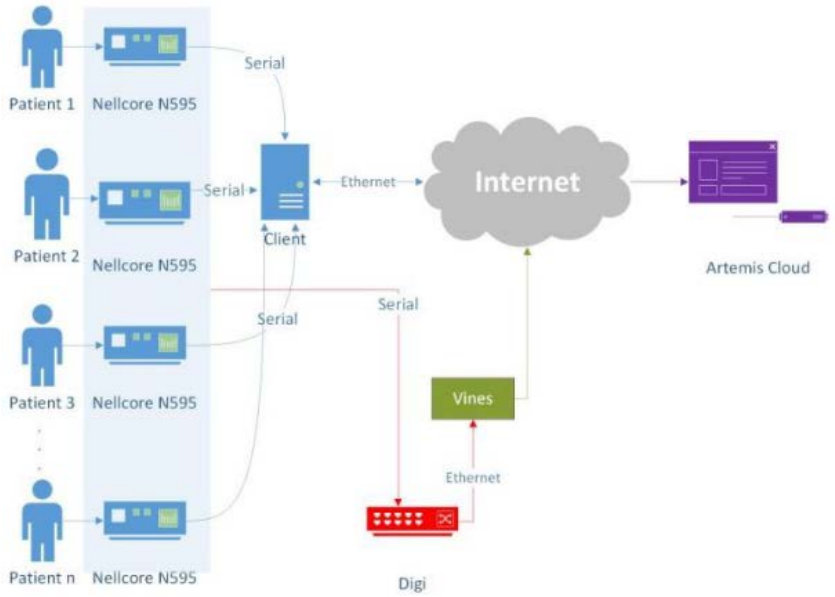

Figure 2-1 – A Testing Architecture for the Artemis platform proposed in [23] *to support Health Analytics as a Service (HAaaS)*

Artemis platform as shown in Figure 2-1. That framework was proposed for testing in two phases, first of which demonstrated an end-to-end testing of the platform's capability to provide Health Analytics as a Service (HAaaS). Within their case study set at a remote hospital in India known as Belgaum Children's Hospital, existing Nellcor 595 pulse oximeters (that is a bedside medical device to monitor NICU patients) were utilized to generate high frequency data streams containing parameters including device information, parametric indicators, patient identification, and timestamps. Data was acquired via a serial-to-Ethernet converter connected to a laptop and printer at the hospital. The same device from the Joint Research Centre for AI for Health and Wellness (formerly known as the Health Informatics Research laboratory) transmitted data through the local network onto the Artemis Cloud instance which operated a cloud HAaaS. Subject to the remaining Artemis Cloud components, data streams can then be converted and transformed, in preparation for consuming analytics for clinical conditions and downstream consumers for Visualization and Results Presentation of generated outputs. While that work demonstrated an architecture that address challenges of big data streaming and supports high availability and reliability for HAaaS, a wholistic approach to encapsulate physiological feedback as a human factor in continuous monitoring was neglected.

Big data analytics in healthcare is an extensive discipline with established architectures, many of which are designed to holistically to include human factors and organizational systems. In 2018, Wang et al in [34] presented a five-layer big data analytics architecture for healthcare organizations. Depicted in Figure 2-2, the layers that their

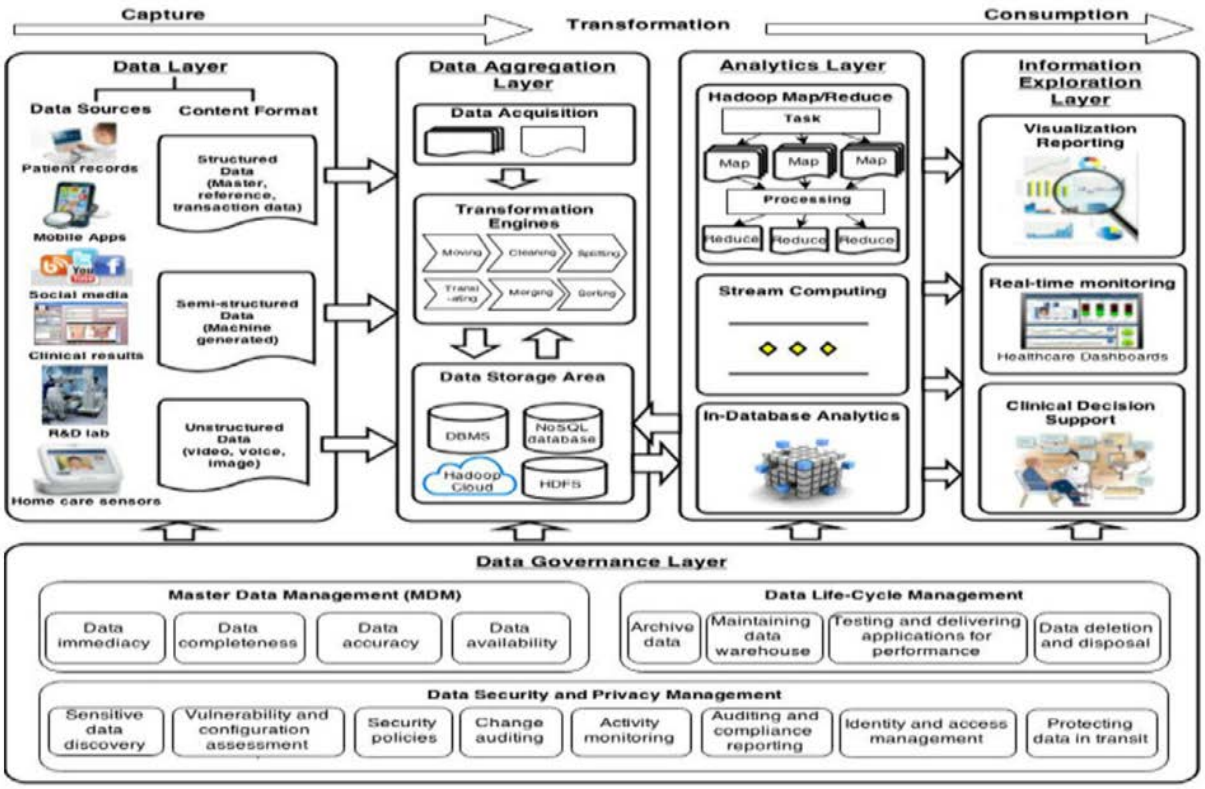

Figure 2-2 - Big data analytics architecture in healthcare [34]

architecture include the: Data layer, Data Aggregation layer, Analytics layer, Information Exploration layer, and Data Governance layer. While the authors present five layers of functionality for healthcare that big data analytics can help address, that framework also neglects to include a mechanism to enable feedback of data pertaining to interventions performed for a holistic approach to individualized monitoring. While capabilities of traceability, predictive analytics, decision support abilities, unstructured data analyses abilities, and analytics to detect patterns of healthcare are observed across 26 big data case reviews in detail, there is no mention of physiological feedback components in any cases they survey. From the human factor's perspective, the impact of interventions in big data streaming architectures have not been considered. In addition, their architecture neglects the feedback of countermeasure and intervention analytics. Combining the

parameters found in an extreme environment with multiple humans required for health monitoring, continuous health monitoring and the application of big data analytics in remote settings requiring a high level of autonomous operation presents further challenges in such complex systems.

In 2013, the Artemis platform was proposed as a computing framework that encapsulates components for data acquisition, online analysis, result presentation, data persistency, knowledge extraction, and deployment and re-deployment of diagnostic and predictive analytics algorithms to support autonomous astronaut health monitoring in space [35]. That framework was demonstrated in an instantiation of the Artemis platform to provide HAaaS as shown in Figure 2-3. Proven as a big data analytics platform and having demonstrated its relevance in support of the clinical health care management setting, particularly in NICU in several hospitals across the globe, Artemis enables real-time clinical monitoring, supporting multi-patient, multi-diagnosis, and multi-stream temporal analysis for real-time clinical management and retrospective research [12].

The Artemis framework supports real-time data capture and temporal analytics enabling analysis of wave form and numeric physiological data acquisition, online analytics, result presentation, data persistency, knowledge extraction (for retrospective studies), and (re)deployment of derived knowledge and analytics. The data acquisition component relies on the physiological data collected from existing monitoring devices. This data is then forwarded to the Online Analysis component, which employs IBM's InfoSphere Streams (hereinafter referred to as Streams) to process the data in real-time. Streams is a scalable big data streaming software that can handle multiple streams of high

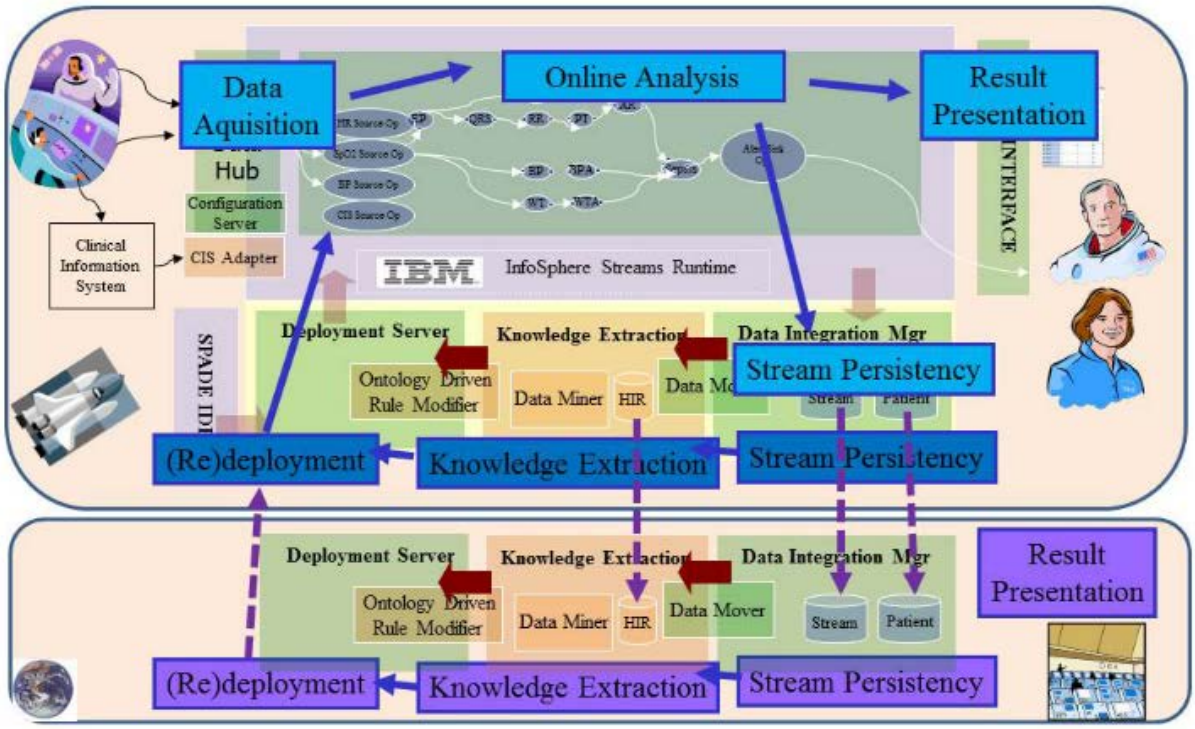

Figure 2-3 – Artemis platform supporting online health analytics and astronaut health monitoring during spaceflight [35]

volume, high-rate data and then enables storing of the derived analytics along with the raw data in the Data Persistency component. Further development of diagnostic and prognostic algorithms can also be provisioned through stream operators designed with evidence-based hypothesis from clinical decision support practices [25]. The Knowledge Extraction component utilizes McGregor's patented Service-Based Multi-Dimensional Temporal Data Mining ($STDM^{n}_{0}$) temporal data mining method to perform retroactive data analyses supporting discoveries of conditions from the physiological data streams and relevant clinical data [13]. New knowledge can then be re-deployed back within the Online Analysis component further enhancing the clinical support provisioned by the Artemis framework.

The robustness of the Artemis platform has been demonstrated in several instances in terrestrial based settings, particularly in NICUs in Canada, USA, China, and

Australia amongst premature and ill full-term infant population. Its expansive data management capabilities have also demonstrated its benefits in physiological monitoring applicability for public safety personnel such as, tactical operators and firefighters through the companion platform, Athena.

As shown in Figure 2-4, Athena extends Artemis by incorporating data sources generated from external environments such as serious games designed for adaptation and pre-acclimation resilience assessment and training. Applications of the Athena platform has been demonstrated in human performance experiments including tactical operators and firefighters [20], [21], [36]. That framework has since been extended for applications in monitoring patients in intensive care and user participants in adaptation and resilience training workshops, to include components for data collection, data buffering and transmission, middleware data capture, and have even extended platform

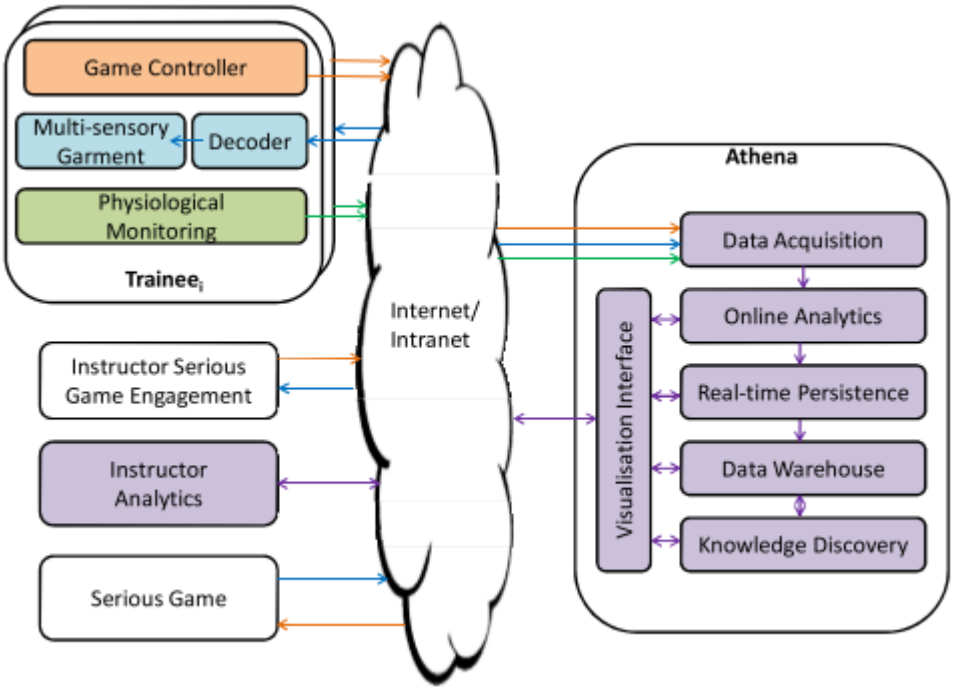

Figure 2-4 – Integration of serious game training within the Athena platform [20], [21], [36]

components for remote monitoring for rural and remote communities [12], [19], [20], [37]. The multidimensional frameworks instanced within the Artemis and Athena platforms address many of the big data challenges discussed, however, mechanisms to enable data as feedback still remains, hindering current big data streaming and continuous health monitoring frameworks from enabling effective intervention assessments.

In addition to Artemis's major components, an integrated adaptive API based on edge computing theory was created in 2018 within the Artemis platform that supports real-time data streaming [37]. Shown in dark purple in Figure 2-5, they present the use of this data processing and standardization for real-time streaming analytics as a service. However, Design of that adaptive API is limited to stream from data producers only. That real-time streaming adaptive API lacks a consideration for streaming derived analytics

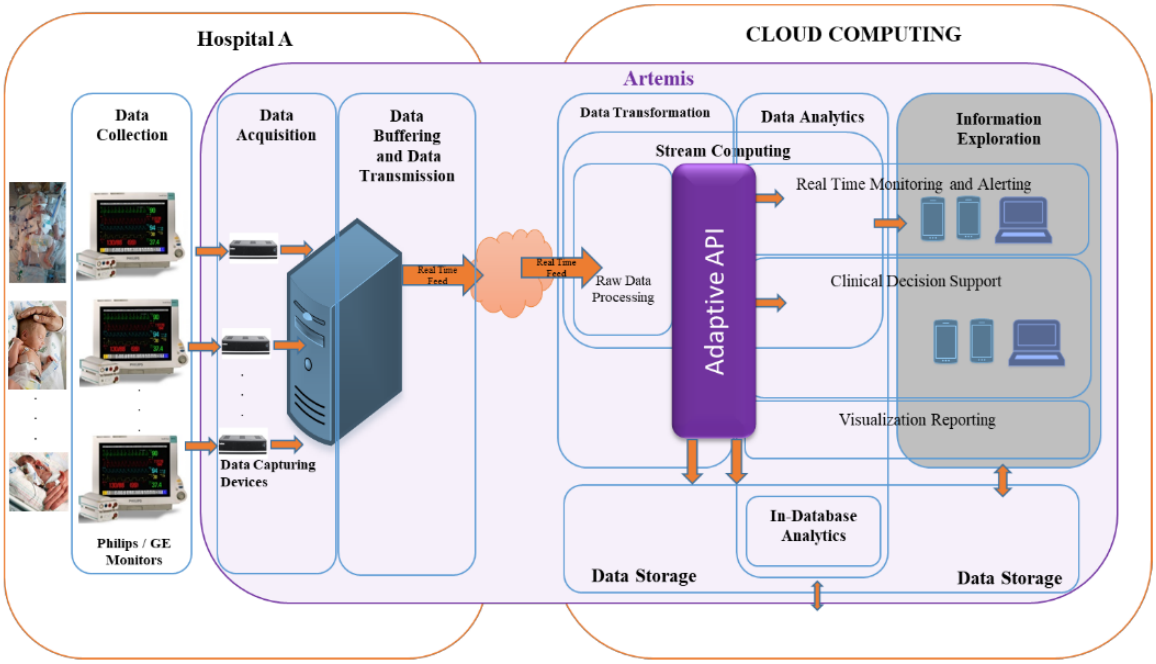

Figure 2-5 – Adaptive API for Real-Time Streaming Analytics [37]

such as countermeasure data that can be fed back into the computing framework. Hereinafter termed as a sub-component in the proposed extended framework of this thesis, there is potential to provision that adaptive API with a mechanism to ingest derived data as feedback to ultimately enable a holistic approach to intervention assessment.

The scope of this thesis also focusses on current frameworks and architectures that have been created to support challenges and complexities of a Space Medicine Decision Support System (SMDSS). In an effort to provision a SMDSS on long duration spaceflight missions, the Canadian Space Agency (CSA) developed the Advanced Crew Medical System (ACMS) in 2016 [38]. With its conceptual diagram is shown in Figure 2-6, the ACMS architecture provisioned the SMDSS as a computer program to run on a laptop. That system consists of three main components, namely: 1) Input, 2) Output, and 3) Data Processing and Handling. The Input component consists of pre-flight information (such as

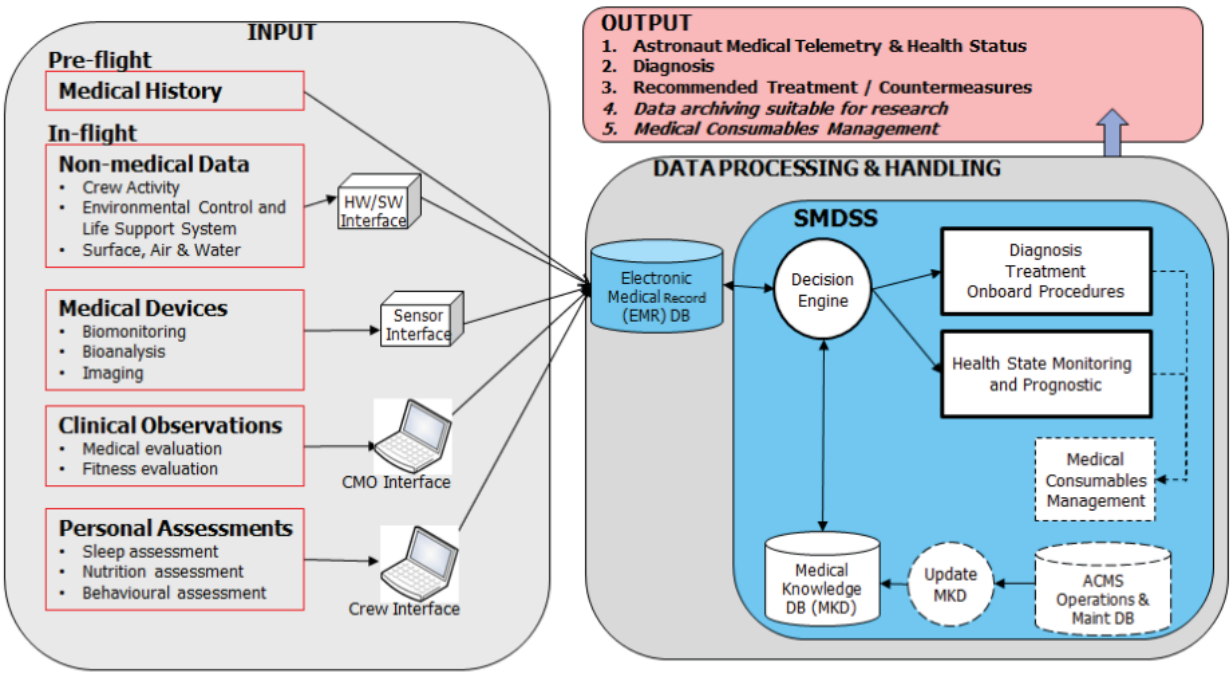

Figure 2-6 – Conceptual diagram of the Advanced Crew Medical System (ACMS) to assist the health management of crew by provisioning a Space Medicine Decision Support System (SMDSS)

medical histories of the crew) and relevant in-flight information (such as non-medical data, data from bio-monitoring, bioanalysis, and imaging devices, clinical observations for medical and fitness, as well as personal assessments for sleep, nutrition, and behavioral). All information of which are consolidated in an Electronic Medical Record (EMR) database in the Data Processing and Handling component. The Data Processing and Handling component include components that enable processing of medical knowledge models and applying them to the data, thereby enabling individual crewmember health assessments and a diagnosis and prescribed treatment plan as provisioned within the SMDSS. As such, that SMDSS includes a repository of Diagnosis Treatment Onboard Procedures, Health State Monitoring and Prognostics, Medical Consumables Management, and a Medical Knowledge database. Mention of non-medical data such as environmental data may also be stored in a database that the Decision Engine should be able to retrieve data from as necessary. Finally, the Output component includes functionalities to enable the following: 1) Astronaut Medical Telemetry & Health Status, 2) Diagnosis, 3) Recommended Treatment / Countermeasures, 4) Data archiving suitable for research, and 5) Medical Consumables Management.

While this was an extensive architecture developed for health and medical management of individual crew members, no provisions for big data analytics were mentioned. And as such, Orlov et al in [39] extended that architecture with the provision of Artemis to incorporate big data streaming and analysis with data collected from two experiments, namely: Luna 2015 and Dry Immersion 2016. From these experiments, the data gathered was utilized within a big data analysis framework that enabled a

demonstration of high frequency physiological data processing in real-time with the online health analytics platform, Artemis, which enabled continuous health monitoring. However, that demonstration did not reflect any exercises or countermeasures that participants may have conducted in either of the experiments as interventions. As such activities are known to impact to their physiology in space, that framework lacked a component to enable a feedback mechanism back into the framework to integrate countermeasure information and to enable countermeasure and intervention health assessments. These activities will further be discussed in the next chapter.

2.3 Conclusion

This chapter presented the foundations of information system frameworks, big data analytics, and computing platform theories upon which inform the development of the framework proposed within this thesis. The integrated workings of modern capabilities to collect data from sensor devices connected within a network between human, organization, and technologies have led to the need for an effective medical health information system that aligns human users with technologies within a healthcare organization. As such, there is a need for information system frameworks to describe these systems through structured approaches to enable derivation of information and knowledge. In addition, analytics that (re)deploy large volumes of data currently captured either retrospectively or in real-time or both in continuous health monitoring systems present big data challenges. While established frameworks demonstrated in edge and cloud computing architectures such as the Artemis and Athena platforms have been

constructed as part of efforts to address such challenges, current information system frameworks and platform architectures lack the inclusivity of countermeasure data to provide individualized countermeasure and intervention health assessments. It is therefore recognized that big data analytics frameworks and architectures to date lack a mechanism for holistic continuous health monitoring to enable long-term health trajectory impact assessments based on countermeasures and intervention activities. These limitations motivate the work proposed in this thesis, which builds upon the foundations of existing work in the Artemis and Athena platform.

REFERENCES

[1] C. McGregor and T. Cibis, "Frameworks and Platforms for Extreme Environments Adaptation and Resilience Monitoring," in *Engineering and Medicine in Extreme Environments*, In press., Springer, 2021, pp. 31–53.

[2] C. Catley, K. Smith, C. McGregor, and M. Tracy, "Extending CRISP-DM to incorporate temporal data mining of multidimensional medical data streams: A neonatal intensive care unit case study," *Proc. - IEEE Symp. Comput. Med. Syst.*, pp. 9–13, 2009, doi: 10.1109/CBMS.2009.5255394.

[3] R. Plotnick, "Computers, Systems Theory, and the Making of a Wired Hospital: A History of Technicon Medical Information System, 1964–1987," *J. Am. Soc. Inf. Sci. Technol.*, vol. 61, no. 6, pp. 1281–1294, 2010, doi: http://dx.doi.org/10.1002/asi.21324.

[4] C. Mcgregor, G. Bryan, J. Curry, and M. Tracy, "The e-Baby Data Warehouse : A Case Study Case study," vol. 00, no. c, pp. 1–7, 2002.

[5] M. Blount *et al.*, "Real-Time Analysis for Intensive Care: Development and Deployment of the Artemis Analytic System," *IEEE Eng. Med. Biol. Mag.*, vol. 29 (2), no. April, pp. 110–118, 2010.

[6] C. McGregor, "Big Data in Neonatal Intensive Care," *Computer (Long. Beach. Calif).*, vol. 46, no. 6, pp. 54–59, 2013, doi: 10.1109/MC.2013.157.

[7] W. Huang, C. McGregor, and A. James, "A comprehensive framework design for continuous quality improvement within the neonatal intensive care unit: Integration of the SPOE, CRISP-DM and PaJMa models," *2014 IEEE-EMBS Int. Conf. Biomed. Heal. Informatics, BHI 2014*, pp. 289–292, 2014, doi: 10.1109/BHI.2014.6864360.

[8] C. McGregor *et al.*, "Health Analytics as a Service with Artemis Cloud: Service Availability," *Proc. Annu. Int. Conf. IEEE Eng. Med. Biol. Soc. EMBS*, vol. 2020-July, pp. 5644–5648, 2020, doi: 10.1109/EMBC44109.2020.9176507.

[9] C. Inibhunu, J. Yeung, A. Gates, B. Chicoine, and C. McGregor, "A Decoupled Data Pipeline and its Reliability Assessment: Case Study in Extreme Climatic Humans Studies," *IEEE Big Data Conf. BPOD*, pp. 3075–3084, 2021.

[10] C. McGregor, C. Catley, and A. James, "Variability analysis with analytics applied to physiological data streams from the neonatal intensive care unit," *Proc. - IEEE Symp. Comput. Med. Syst.*, pp. 1–5, 2012, doi: 10.1109/CBMS.2012.6266385.

[11] J. Cirelli, C. McGregor, B. Graydon, and A. James, "Analysis of continuous oxygen saturation data for accurate representation of retinal exposure to oxygen in the preterm infant," *Stud. Health Technol. Inform.*, vol. 183, pp. 126–131, 2013, doi: 10.3233/978-1-61499-203-5-126.

[12] C. McGregor, "Big Data in Critical Care Using Artemis," *Signal Process. Mach. Learn. Biomed. Big Data*, pp. 519–531, 2018, doi: 10.1201/9781351061223-26.

[13] C. McGregor, C. Catley, A. James, and J. Padbury, "Next generation neonatal health informatics with artemis," *Stud. Health Technol. Inform.*, vol. 169, pp. 115–119, 2011, doi: 10.3233/978-1-60750-806-9-115.

[14] M. Blount *et al.*, "Real-Time Analysis for Intensive Care," *IEEE Eng. Med. Biol. Mag.*, vol. 29 (2), no. April, pp. 110–118, 2010.

[15] C. McGregor, B. Bonnis, B. Stanfield, and M. Stanfield, "Integrating Big Data analytics, virtual reality, and ARAIG to support resilience assessment and development in tactical training," *2017 IEEE 5th Int. Conf. Serious Games Appl. Heal. SeGAH 2017*, pp. 1–7, 2017, doi: 10.1109/SeGAH.2017.7939256.

[16] C. McGregor, B. Bonnis, B. Stanfield, and M. Stanfield, "Integrating Big Data analytics, virtual reality, and ARAIG to support resilience assessment and development in tactical training," *2017 IEEE 5th Int. Conf. Serious Games Appl. Heal. SeGAH 2017*, pp. 1–7, 2017, doi: 10.1109/SeGAH.2017.7939256.

[17] C. McGregor and B. Bonnis, "New Approaches for Integration: Integration of Haptic Garments, Big Data Analytics, and Serious Games for Extreme Environments," *IEEE Consum. Electron. Mag.*, vol. 6, no. October, pp. 92–96, 2017, doi: 10.1109/MCE.2017.2715519.

[18] C. McGregor and B. Bonnis, "Big data analytics for resilience assessment and development in tactical training serious games," *Proc. - IEEE Symp. Comput. Med. Syst.*, vol. 2016-Augus, pp. 158–162, 2016, doi: 10.1109/CBMS.2016.64.

[19] C. McGregor, B. Bonnis, B. Stanfield, and M. Stanfield, "A method for real-time stimulation and response monitoring using big data and its application to tactical training," *Proc. - IEEE Symp. Comput. Med. Syst.*, vol. 2015-July, pp. 169–170, 2015, doi: 10.1109/CBMS.2015.44.

[20] C. McGregor, F. M. Williams-Bell, and B. Bonnis, "Extreme Climate Pre-Deployment Acclimation Resilience Assessment Using Climate Chambers and Big Data," *10th Annu. Mil. Veteran Heal. Res. Forum*, p. 87, 2019, doi: 10.3233/PRM-170430.

[21] C. McGregor, F. M. Williams-Bell, and B. Bonnis, "Using Streaming Big Data for Resilience Assessment within Pre-service Firefighter Extreme Condition Training," *9th Annu. Mil. Veteran Heal. Res. Forum*, p. 29, 2018.

[22] D. Broeders, E. Schrijvers, B. van der Sloot, R. van Brakel, J. de Hoog, and E. Hirsch Ballin, "Big Data and security policies: Towards a framework for regulating the phases of analytics and use of Big Data," *Comput. Law Secur. Rev.*, vol. 33, no. 3, pp. 309–323, 2017, doi: 10.1016/j.clsr.2017.03.002.

[23] M. Bastwadkar, C. McGregor, and S. Balaji, "A cloud based big data health-analytics-as-a-service framework to support low resource setting neonatal intensive care unit," *PervasiveHealth Pervasive Comput. Technol. Healthc.*, pp. 30–36, 2020, doi: 10.1145/3418094.3418130.

[24] M. H. ur Rehman, P. P. Jayaraman, and C. Perera, "The Emergence of Edge-Centric Distributed IoT Analytics Platforms," in *Internet of Things*, 2017, pp. 213–228.

[25] A. Thommandram, J. M. Eklund, C. McGregor, J. E. Pugh, and A. G. James, "A Rule-Based Temporal Analysis Method for Online Health Analytics and Its Application for Real-Time Detection of Neonatal Spells," *Big Data (BigData Congr. 2014 IEEE Int. Congr.*, pp. 470–477, 2014, doi: 10.1109/BigData.Congress.2014.74.

[26] C. McGregor, A. James, M. Eklund, D. Sow, M. Ebling, and M. Blount, "Real-time multidimensional temporal analysis of complex high volume physiological data streams in the neonatal intensive care unit," *Stud. Health Technol. Inform.*, vol. 192, no. 1–2, pp. 362–366, 2013, doi: 10.3233/978-1-61499-289-9-362.

[27] J. M. Eklund and C. McGregor, "Standards for physiological data transmission and archiving for the support of the service of critical care," *ACM SIGBED Rev.*, vol. 6, no. 2, pp. 1–6, 2009, doi: 10.1145/1859823.1859832.

[28] D. Boyd and K. Crawford, "Six Provocations for Big Data," *A Decad. Internet Time Symp. Dyn. Internet Soc.*, pp. 1–17, 2011, doi: 10.2139/ssrn.3727562.

[29] M. Garofalakis, J. Gehrke, and R. Rastogi, *Data Stream Management: Processing High-Speed Data Streams*. 2009.

[30] C. Inibhunu and C. McGregor, "Machine Learning Model for Temporal Pattern Recognition," *2016 IEEE EMBS Int. Student Conf.*, pp. 1–4, 2016, doi: 10.1109/EMBSISC.2016.7508614.

[31] C. Inibhunu and C. Mcgregor, "Application of TPRMine method for identification of temporal changes on patients with COPD: A case study in telehealth," *Proc. - IEEE Symp. Comput. Med. Syst.*, vol. 2020-July, pp. 380–383, 2020, doi: 10.1109/CBMS49503.2020.00078.

[32] A. J. Hadad, D. A. Evin, B. Drozdowicz, and O. Chiotti, "Temporal abstraction for the analysis of intensive care information," *J. Phys. Conf. Ser.*, vol. 90, no. 1, 2007, doi: 10.1088/1742-6596/90/1/012074.

[33] M. Stacey and C. McGregor, "Temporal abstraction in intelligent clinical data analysis: A survey," *Artif. Intell. Med.*, vol. 39, no. 1, pp. 1–24, 2007, doi: 10.1016/j.artmed.2006.08.002.

[34] Y. Wang, L. A. Kung, and T. A. Byrd, "Big data analytics: Understanding its capabilities and potential benefits for healthcare organizations," *Technol. Forecast. Soc. Change*, vol. 126, pp. 3–13, 2018, doi: 10.1016/j.techfore.2015.12.019.

[35] C. McGregor, "A platform for real-time online health analytics during spaceflight," *IEEE Aerosp. Conf. Proc.*, 2013, doi: 10.1109/AERO.2013.6497382.

[36] C. McGregor, B. Bonnis, B. Stanfield, and M. Stanfield, "A method for real-time stimulation and response monitoring using big data and its application to tactical training," *Proc. - IEEE Symp. Comput. Med. Syst.*, vol. 2015-July, pp. 169–170, 2015, doi: 10.1109/CBMS.2015.44.

[37] C. Inibhunu, R. Jalali, I. Doyle, A. Gates, J. Madill, and C. McGregor, "Adaptive API for Real-Time Streaming Analytics as a Service," *41st Int. Eng. Med. Biol. Conf.*, pp. 3472–3477, 2019.

[38] "SOW Advanced Crew Medical System (ACMS) Space Medicine Decision Support System Prototype Technology Development," 2016.

[39] O. Orlov, C. McGregor, R. Baevsky, A. Chernikova, A. Prysyazhnyuk, and V. Rusanov, "Perspective Use of the Technologies for Big Data Analysis in Manned Space Flights on the International Space Station," *68th Int. Astronaut. Congr. (IAC 2017)*, 2017.

Chapter 3. Contextual Review – Space Medicine Decision Support

This chapter discusses contextual applications of computing platforms in the field of space medicine which motivates the second and third research questions. The domain of space medicine is introduced in this chapter as well as global motivations for deep space exploration and longer duration spaceflight. Health effects and physiological changes due to spaceflight will be contextually discussed as countermeasures and preventive measures conducted in space form the foundational application space that the work in this thesis proposes to address. This chapter will present the current related multidisciplinary research work that sets a case study requirement to extend Artemis as the Big Data analytics platform by incorporating countermeasure data into the Online Analytics component in an effort to adjust the trajectory of the health state of the human body in space over time.

3.1 Autonomous Medical Care for Long Duration Spaceflight

The inherent health risks of space flight have long been known since the early days of orbital flight. From the first Russian space station (Mir), to Skylab missions, Apollo missions, Space Shuttle flights, and missions now on the ISS, sending humans to space have incrementally extended from 3-4 days on Mir and Skylab, to 9 on the Apollo, and now up to 6-12 months for astronauts on the ISS [1]. While the effects on health and physiology due to microgravity exposure can be minor and temporary, some effects are long-term and can lead to severe changes as astronauts post-flight re-adapt back to Earth's gravity [2].

At the turn of the new century, the National Research Council (NRC) published two reports reflecting requirements to support the future of human spaceflight: *A Strategy for Research in Space Biology and Medicine in the New Century* was published in 1998 and a *Review of NASA's Biomedical Research Program* was published in 2000. The first report provided a science-based assessment of the most relevant and crucial biomedical research topics to be investigated including sciences that study plants, animals, and humans [3]. The second report measured NASA's biomedical research enterprise within the two years' time against the plan set forth in the former report [4]. As a result, the committee, Creating a Vision for Space Medicine During Travel Beyond Earth Orbit, was formed by the Institute of Medicine (IOM). In 2001, they endorsed findings from both reports in the publication, *Safe Passage: Astronaut Care for Exploration Missions*, and extended their study to assess the current understanding of space medicine and astronaut health care in low Earth orbit [2]. This set the precedence for medical care systems and research in space medicine in the years to come.

The Bioastronautics Roadmap, published in 2005, addresses the priorities of the research and technology development necessary for extending human space travel to the ISS, the Moon, and Mars for durations of one year, 10-44 days, and 30 months, respectively [5]. It identifies the most important biomedical, human health, and system performance involved in human space flight. Within the roadmap, some of the most high priority activities in addressing health and medical issues for a mission to Mars and a lunar mission include [5]:

1. Addressing the requirements for autonomous medical care (AMC) capabilities including pharmacology of space medicine, medical informatics technologies and decision support systems, and skill training and maintenance
2. Providing radiation protection
3. Maintaining behavioral health and psychosocial functioning
4. Developing and validating countermeasures for adaptation affects from microgravity exposure such as accelerated bone loss and sensory-motor function after landing
5. Providing capabilities for remote medical care

Bioastronautics Roadmap notes that despite the continuous efforts in recent decades to address health issues for astronauts through the use of engineering design and countermeasures that has been successful for current short-duration missions of 3-6 months, deep space for long duration missions such as that of 2-3 years is a "unique environment that requires a different approach" [3]. The following section presents the health effects of spaceflight that necessitates the need of countermeasure activities and preventive measures.

3.2 Health Effects Due to Spaceflight

Human space travel has been an incredible technologic advancement. At the turn of the century in 2001, the IOM combined the most relevant and crucial biomedical

research topics for humans in space [3], [6] and presented concise clinical research opportunities to address health issues for deep space in [7]. The research opportunities presented in that publication is by no means exhaustive. Changes to physiology in space is a complex problem and various systems of the body can be affected including the musculoskeletal system, cardiovascular system, pulmonary system, pulmonary system, nervous system, hematological system, immunological system, and the visual system.

The effects of long-term space travel can be detrimental to crew members health. Sensorimotor alteration, degradation of the musculoskeletal system, cardiovascular deconditioning, and visual impairment due to intracranial pressure are just a handful of physiological conditions [8]–[10]. Bone density loss has long been a known physiological effect of long-term spaceflight. Known as osteoporosis on Earth, different groups of people lose bone mineral more rapidly than others; bone mineral loss occurs a rate of 1% to 1.5% per year on Earth for elderly men and women [11]. Astronauts on the ISS lose an average of 1% per month [11]. Maintaining the health of the musculoskeletal system is critical for the crewmember in every mission as specific task may make an astronaut's body more prone to impact and a broken bone in space could even lead to imminent failure of an entire mission. However, the detection of bone density changes is not immediate. Samples are obtained pre-flight and post-flight, and data is obtained intermittently throughout the mission. The data gets analyzed retrospectively and results are presented after any irreversible changes [12].

Another physiological effect due to microgravity concerns fluid shifts in the body, affecting the regulatory systems and adaptive mechanisms. Gravity on Earth causes a

specific hydrostatic gradient on the body and the cardiac work required to deliver blood to the upper regions of the body goes against that gradient. Studies have shown that cardiac atrophy and decreased ventricular function can occur within only two weeks of exposure to microgravity; these are primary characteristics responsible for orthostatic intolerance and reduced aerobic capacity, both of which are crucial for crewmembers to perform mission-critical activities, experiments and conduct extravehicular (EVA) walks along the ISS [13]. Although Earth-based simulation studies have shown results in the prevention of cardiac atrophy amongst cohorts who exercise prior to bed-rest, there has been no literature found to date on the quantifiable efficacy of cardiovascular conditioning as a countermeasure for spaceflight [13], [14].

According to [10], visual impairment was reported by 29% of astronauts returning from short-duration and 60% were reported from astronauts from long-duration missions. NASA now lists Spaceflight Associated Neuro-ocular Syndrome (SANS), formerly known as visual impairment and intracranial pressure syndrome (VIIP), as one of the top maladaptive outcomes due to microgravity. SANS has been associated with cephalad fluid shift in the body found from elevated cerebral spinal fluid pressure. This syndrome, or other in-flight and post-flight visual acuity, has mostly been associated with male astronauts of poorer cardiovascular health compared to women. Zhang and Hargens [15] recommend that intermittent artificial gravity (IAG) training can be effective in preventing SANS, similarly for cardiovascular conditioning through training regimens for long duration spaceflight; they further indicate that tissue remodeling supported by IAG may prevent SANS syndrome, yet no other mechanism or preventive measure was reviewed.

Closing the gap to understand the adaptive work required of the physiological state of the human body in space is crucial for all future mission plans. As such the unknown physiological impacts of future long duration spaceflight give rise to the need for advanced understanding in countermeasure exercise and preventive measures in space. The next section presents the existing countermeasure regimens and preventive measures conducted on the ISS and exposes the need for an individualized countermeasure and intervention assessment methodology framework that should have the capabilities to run autonomously and in real-time.

3.3 Countermeasure and Preventive Measures

Astronauts on ISS missions conduct countermeasures and preventive measures as part of their daily advised exercise regimens. The exercise programs are designed to maintain a healthy physiological state for inflight endurance, performance, as well as for their post-flight recovery journey. The effectiveness of these regimens have been proven through various studies where results have shown that astronauts who fully execute the prescribed training protocols would demonstrate a lesser decline in post-flight characteristics on physiological systems [9]. These countermeasures allow astronauts to maintain their physiological condition and optimize their body's work performance throughout spaceflight. While countermeasure programs are developing differently according to the astronaut's home space agency [10], [16]–[18], the regimens that have been proven to be sufficiently effective from past space missions are adapted collectively as an international effort.

In particular, the Russian workout regimens prescribed and performed thus far throughout the history of long-term space missions have proven itself sufficiently effective through the decades from Mir and even now on the ISS [19]. The Russian system of preventive countermeasures feature regimens to help Russian cosmonauts (astronauts, hereafter) adapt to the adverse effects of microgravity from missions dating back to the very first human beyond Earth's orbit and Mir missions. The success of the Russian system of preventive countermeasures have been proven effect over the decades and have even allowed Russian cosmonauts to gain the ability to independently exit the capsule upon return to Earth after missions in case of emergencies.

Effective countermeasure programs have adapted a prescribed interval approach (also referred to as "microcycle") pre-flight, during spaceflight, and post-flight [20]. During spaceflight, three stages of physical exercises differ by goals to allow the astronauts to adapt to microgravity accordingly. These stages are: acute adaptation, stabilization, and final or concluding stage where the astronauts prepare for re-exposure to Earth's gravity [21]. As physiological adaptation varies from an individual to individual, the need for an individualized assessment at each segment of spaceflight is presented. However, there is no literature to date that describes any integrated health informatics framework that incorporates these stages of exercises into continuous health monitoring of astronauts conducting countermeasures on the ISS.

3.3.1 Equipment and Devices

Onboard the ISS, countermeasure equipment generates a range of physiological data and equipment information when used by the astronauts. Besides a handful of

parameters that are acquired consistently through the equipment and downlinked to MCC, research experiments and programs that have collected other data involving new devices are still largely based on retrospective analysis. Limited studies have determined the prospect of a feedback potential from active countermeasures performed to assess physiological impact in real-time. In addition, the capability to analyze this data in correlation with the known conclusions of astronauts' health as a result of spaceflight can help build clinical algorithms to be applied to real-time streaming of physiological data enabling big data analytics platforms such as an autonomous health monitoring platform.

There are three primary countermeasure exercise equipment that are used as part of the Russian system of countermeasures on the ISS [19]: the Russian BD-2 treadmill, the cycle ergometer (CEVIS), and the advanced resistive exercise device (ARED). All three pieces of equipment store and record various parameters including heart rate data while the astronaut is active on the equipment for their exercise regimen.

When countermeasure activities are conducted, astronauts attach themselves to the equipment by using a system of shoulder and waist harnesses, adjustable straps, bungee cords, and/or clips [12]. Due to natural forces in microgravity, countermeasure equipment in space are designed with the ability to absorb or transfer vibrations created by the impact of the astronaut's action forces applied on the equipment to the space station's structure. These vibrations translate to data which generate values. For instance, the force of impact on the knee while an astronaut is running on the BD-2 Treadmill is captured as ground reaction force data, using force-measuring insoles and the weight of the bungees cords that keep the astronauts on the belt [22]. Following their exercise, the

PCMCIA that stores and record the parameters from the BD-2 is manually plugged into the Station Support Computer (SSC) for data downlink to Mission Control for retrospective analysis. Data parameters are recorded as a data file on a flash drive on the CEVIS, which gets loaded onto the SSC for downlink to ground control for retrospective analysis as well. The ARED consists of a built-in instrumentation board that enables data acquisition to the device's tablet PC for recording and visual display to the astronaut. This data is automatically downloaded to the ISS's server and downlinked to Mission Control for retrospective analysis.

Although current missions expose astronauts to weightlessness and radiation for a reasonable amount of time and dosage such that their health returns to an acceptable

Figure 3-1 – ARED (Photo courtesy of NASA)

Figure 3-2 – CEVIS (Photo courtesy of NASA)

Figure 3-3 – BD-2 Treadmill (Photo courtesy of Youtube/NASA)

degree back on Earth, the potential long-term physiological effects of space on longer duration missions still remain largely unknown [5], [7]. As such there is great potential to advance current knowledge in physiological effects of spaceflight, which can be enhanced with data collected from countermeasure activities conducted as well.

3.4 Space Medicine Decision Support Systems

The emergence of Big Data analytics, particularly in health information systems, has evidently opened a range of transdisciplinary research and published work that relates space medicine and individualized real-time astronaut health monitoring utilizing acquired physiological data. In addition to the Artemis platform proposed to support astronaut health monitoring in 2013 [23], Eklund and McGregor in [6] also presented the technological and remote limitation of Earth-based health monitoring from Mission Control for long duration space mission such as one to Mars. Real-time communication with Earth would have a roundtrip latency that can be as long as 44 minutes from Mars. Multiple space vehicles are to be utilized for a Mars mission. A launch vehicle to get the crew into earth orbit, a Mars Transit Vehicle (MTV) to get the crew to Mars, the Surface Habitation (SHAB) module for Mars entry, descent, and landing (EDL), the descent/ascent vehicle (DAV) for ascent and multi-use habitation shelter, and the Orion crew vehicle for earth descent upon their return [6]. With vehicles at various stages of a long duration space mission and known communication limitations that are expected to be associated with Mars and lunar communication [24], the opportunity for an appropriate modular, autonomous, and portable solution for autonomous medical care is presented.

The remote nature of long duration space missions requires optimal performance of critical skills, resilience, and adaptation. The Artemis platform proposed for spaceflight by McGregor in [23], [25] has demonstrated a robust capabilities in case studies for patient populations in NICUs at McMaster Children's[26], Southlake Regional Hospital[27], WHIRI[28], Children's Hospital of Fudan University[29], and is currently subject to implementation in Australia and India as well. Recent research applications in space medicine, firefighter training programs, and tactical operators resilience training assessments have also proven Artemis and its sister platform, Athena, robust enough to support autonomous health and physiological decision making in real-time[30]–[32]. However, that framework is limited. While physiological data can be generated from a range of sensors and devices, equipment that generates mechanical data generated from equipment used for countermeasure activities as well has potential to provide information back to the user of an online analytics platform, such as that of Artemis. To date, no system has integrated multiple equipment and devices correlated with activity and physiology back into a big data analytics framework or model for real-time physiological monitoring.

As a component of the research of this thesis, in 2017, Yeung and McGregor proposed the incorporation of data from existing countermeasure equipment on the ISS into the Artemis platform [33]. The authors outlined a thorough review of existing countermeasure equipment and preventive measures in which various data parameters can be obtained for retrospective analysis and research upon downlink from the ISS to Mission Control. However, their review lacked design limitations in the functionality of a

feedback mechanism to incorporate derived countermeasure data analytics. In 2019, an extended framework was created to support data collection from countermeasure equipment and to support real-time monitoring during countermeasure regimens conducted in space [34]. Authors discussed a case study that demonstrated the ability of that framework to integrate countermeasure data on the ISS, however, there was a lack of mention of how countermeasure data and derived analytics can be (re)deployed back into the Artemis architecture. In 2021, a feedback mechanism was proposed within the Artemis framework for a case study with data from firefighters who underwent Cold Stress Training Scenario [35]. This diagram is shown in Figure 3-4. However, the Analytics (Re)deployment capabilities as "feedback" back onboard from Mission Control was

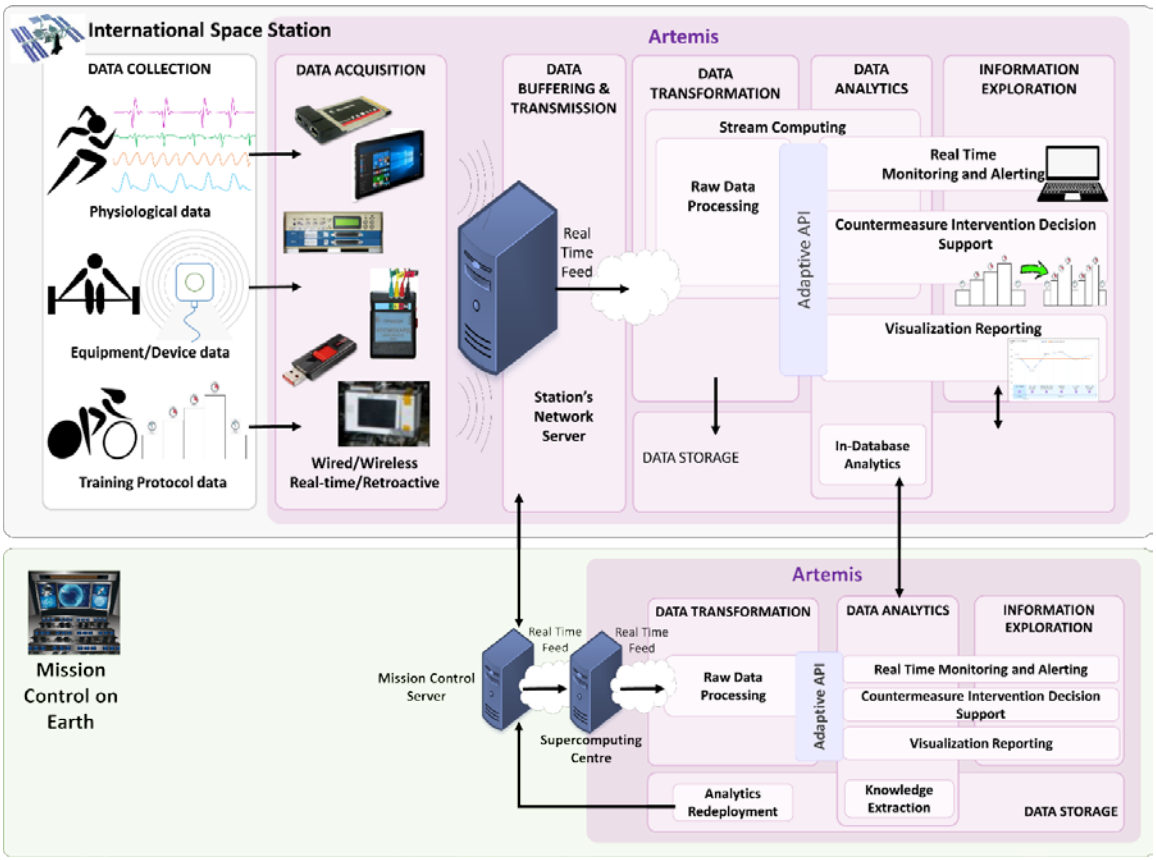

Figure 3-4 – Health Analytics Monitoring for Astronauts on the ISS with Countermeasure Data, referenced in [35]

enabled only deployed from Mission Control. In order to deliver a SMDSS solution that meet the requirements of an ACMS as described in Section 2.2, an autonomous (re)deployment feature onboard the ISS would be required.

While there have been many experiments that has collected data from the astronauts for scientific discoveries of the human body's adaptation to microgravity and radiation level effects, there is also a lack of a consistent acquisition method from the astronauts when they are not active on the countermeasure equipment. A standardized protocol such as Health Level 7 (HL7) is capable of streaming physiological data through a hospital and should be within reasonable technologic capacity aboard a spacecraft to collect data from countermeasure devices and equipment to enable autonomous monitoring of astronauts. With Artemis's capacity to take in frequencies of that from health monitors in standard NICUs also, data streamed from countermeasure equipment which was collected from PCMICA cards and then loaded onto the space stations computer, should also be within reasonable technologic capacity on the ISS to instantiate Artemis Cloud to demonstrate its capabilities for autonomous medical care for a long duration space mission. Further review of the ability on the ISS to stream data as a sensor network to the space station computer from the monitoring sensors of existing countermeasure equipment is subject to further publication.

Advanced prognostic health management enabled by Artemis has demonstrated its potential toward the development of a holistic space medicine decision support system. However, this platform exists independent to the countermeasure exercise programs that are designed to address adaption challenges. As such, there is immense

potential in advancing capabilities of autonomous health monitoring with countermeasure data.

3.5 Use of Physiological Data in Health Assessment and Stress Responses

Human health and adaptation in the extreme environment of space has long been monitored and analyzed iteratively with physiological data acquired from the human body in space. In particular, heart rate variability (HRV) analysis has been popularly used to assess different functional health states of the human body in space medicine, including overall health risks and clinical prognosis for patients with various chronic diseases, including cardiovascular diseases and age-related changes [36]. HRV analysis also enables the assessment of "adaptation cost", which is defined as "pressure on regulatory systems required for coping with a load" [36].

A pioneer of space cardiology, R. M. Baevsky in [37] extensively outlined the theoretical basis for HRV analysis as it depends on various degrees measured on the tension of the body's regulatory systems. He discusses three examples that illustrates HRV analysis on the physiological data collected from three cosmonauts from a long-term 14-month space mission and demonstrates the individualized differences of each member's adaptation to flight conditions and their levels of functional reserves at different stages of space flight. The results of this study was published in 2002 and the method of data acquisition included "(i) telemetric channels (when transmitting a real-time ECG to the Earth), (ii) a radio channel (when transmitting to the Earth the ECG signals modulated by

sound frequency and recorded on a portable tape recorder during the physical training of cosmonauts), and (iii) memory devices (floppy disks, magnetic tapes, flash cards, etc)" and HRV analysis was derived from recordings of 10-15 minutes to 24 hours (Holter monitoring) [37]. Although the data recording windows were inconsistent, this review was extensive in demonstrating the assessment of stress on the regulatory systems and the physiological cost of stress factors utilizing HRV analysis.

In 2016, Baevsky and Chernikova conducted another study utilizing HRV analysis from ECG data of 5 minutes windows obtained from the Pulse and Pneumocard experiments in 32 cosmonauts in the Russian segment of the ISS over 3-4 months and physiological data from Russian participants in 6 terrestrial control groups (six cities in Russia) over the course of 10-16 months. They demonstrated the classification of individual participant's functional health states based on readings of their sympathetic or parasympathetic activity and HRV data. What they proved is that even for healthy people, "adaptation to the whole multiplicity of external actions is achieved as a result of a particular level of pressure on the [body's] regulatory mechanisms, which may lead to decreased functional reserves and failure of adaptation, including harm to health and diseases" [36]. The Institute of Biomedical Problems in Russia developed the Ekosan-TM2 system for large-scale prenosological investigations as a result of this study. The use of this individual prenosological monitoring system allows people in prenosological and premorbid states to be identified when traditional clinical practice would view that they would not require therapeutic measures to counter any maladaptation symptoms or risks. However, should the process of maladaptation continue in these people and adaptation

risk increases and if timely preventive measures are not taken, the development of pathological deviations from their normal health trajectory homeostatic state should be expected and therefore, health preservation measures can be followed. There is therefore great potential to incorporate physiological data obtained from individual astronaut's countermeasure regimens to present the effectiveness of their exercises on such missions.

To date, data collected from cosmonauts aboard the ISS and cosmonauts in training from Luna 2015 and Dry Immersion 2016 have been successfully represented to determine the body's functional states, however, further development in predictive medical assessments can be considered for visualization between each data recording cycle. In 2017, that proven functional state algorithm developed by Baevsky, was re-engineered by Prysyazhnyuk et al in [32], [38] within the Artemis platform to demonstrate its potential in supporting autonomous real-time prognostic monitoring and assessment of early onset maladaptation responses. This was demonstrated using physiological data collected from participants of a 5-day dry immersion experiment in Russian facilities at the IBMP. The functional health state algorithm developed by Baevsky et al utilizes HRV parameters to determine the "level of tension exerted on the body systems, and to estimate the amount of functional reserves available to support adaptation to changing environmental conditions, and sustainability of homeostasis" [32], [39]. Considering the maladaptation assessments in prenosological monitoring, countermeasure data for monitoring have great potential to be considered to assess the efficacy of astronaut exercises and preventive regimens as well as their homeostatic health trajectory.

3.6 Conclusion

This chapter has presented foundational concepts upon which the work proposed in this thesis is built. Space agencies have dedicated committees that have reviewed and prioritized the physiological impacts of human spaceflight, necessitating the capabilities for autonomous capabilities that concern astronaut health, particularly in space. While the literature has provided evidence of big data streaming and computing frameworks that have been created to help address limitations and challenges in SMDSS, there still lacks a holistic framework that incorporates additional physiological parameters that can be utilized to further advance knowledge in space medicine and countermeasure decision support. More specifically, the reviewed literature has shown that HRV has been a strong parameter in determining cardiovascular health utilizing big data analytics, however, current research is limited by discontinuous windows of monitoring. Furthermore, computing frameworks for SMDSS are hindered by lack of countermeasure integration which have great potential to advance informed human performance, and resilience and adaptation training for immediate intervention assessments.

The Artemis platform has been proposed for SMDSS, however, the platform current exists independent to the countermeasure exercise programs that are designed to help astronauts address adaption challenges. As such, capabilities of existing platforms that support SMDS systems lack a feedback mechanism for derived countermeasure analytics to be (re)deployed. Research gaps present the need to encapsulate countermeasure data onboard the ISS for astronauts to enable a holistic approach to advancing effective countermeasure regimens for long duration spaceflight. Furthering

the advancement of countermeasures for long duration spaceflight would also provide ground-based exercise experts with a more holistic approach in guiding and advising individual astronauts during spaceflight.

REFERENCES

[1] P. D. Hodkinson, R. A. Anderton, B. N. Posselt, and K. J. Fong, "An overview of space medicine," *Br. J. Anaesth.*, vol. 119, pp. i143–i153, 2017, doi: 10.1093/bja/aex336.

[2] Institute of Medicine (IOM), *Safe passage: Astronaut Care for Exploration Missions (Chapter 2)*. Washington, DC: National Academy Press, 2001.

[3] C. on S. B. and Medicine, S. S. Board, and A. Commission on Physical Sciences, Mathematics, N. R. Council, and S. Citation, *A Strategy for Research in Space Biology and Medicine in the New Century*. Washington, DC, 1998.

[4] "Review of NASA's Biomedical Research Program," Washington, DC, 2000. doi: https://doi.org/10.17226/9950.

[5] National Aeronautics and Space Administration, "Bioastronautics Roadmap - A Risk Reduction Strategy for Human Space Exploration," no. February, 2005.

[6] C. on S. B. and Medicine, S. S. Board, and A. Commission on Physical Sciences, Mathematics, and N. R. Council, *Review of NASA's Biomedical Research Program*. Washington, DC: National Academy Press, 2000.

[7] Institute of Medicine (IOM), *Safe Passage: Astronaut Care for Exploration Missions*. 2001.

[8] I. of M. (IOM), *Safe Passage: Astronaut Care for Exploration Missions*. 2001.

[9] I. B. Kozlovskaya and A. I. Grigoriev, "Russian system of countermeasures on board of the International Space Station (ISS): The first results," *Acta Astronaut.*, vol. 55, no. 3–9, pp. 233–237, 2004, doi: 10.1016/j.actaastro.2004.05.049.

[10] L. Wang *et al.*, "Physiological effects of weightlessness: countermeasure system development for a long-term Chinese manned spaceflight," *Front. Med.*, 2018, doi: 10.1007/s11684-017-0587-7.

[11] *Lost in Space: Bone Density Educator Edition*. 2011, pp. 1–9.

[12] R. Gopalakrishnan *et al.*, "Muscle volume, strength, endurance, and exercise loads during 6-month missions in space," *Aviat. Sp. Environ. Med.*, vol. 81, no. 2, pp. 91–102, 2010, doi: 10.3357/ASEM.2583.2010.

[13] A. R. Hargens, R. Bhattacharya, and S. M. Schneider, "Space physiology VI: Exercise, artificial gravity, and countermeasure development for prolonged space flight," *Eur. J. Appl. Physiol.*, vol. 113, no. 9, pp. 2183–2192, 2013, doi: 10.1007/s00421-012-2523-5.

[14] T. A. Dorfman *et al.*, "Cardiac atrophy in women following bed rest," *J. Appl. Physiol.*, vol. 103, no. 1, pp. 8–16, 2007, doi: 10.1152/japplphysiol.01162.2006.

[15] L.-F. Zhang and A. R. Hargens, "Spaceflight-Induced Intracranial Hypertension and Visual Impairment: Pathophysiology and Countermeasures," *Physiol. Rev.*, vol. 98, no. 1, pp. 59–87, 2018, doi: 10.1152/physrev.00017.2016.

[16] V. V. Bogomolov, I. B. Kozlovskaya, I. V. Alferova, a. D. Egorov, and I. V. Kovachevich, "Medical care for Russian cosmonauts on board the ISS," *Hum. Physiol.*, vol. 36, no. 7, pp. 766–772, 2010, doi: 10.1134/S0362119710070054.

[17] N. Petersen *et al.*, "Exercise in space: The European Space Agency approach to in-flight exercise countermeasures for long-duration missions on ISS," *Extrem. Physiol. Med.*, vol. 5, no. 1, pp. 1–13, 2016, doi: 10.1186/s13728-016-0050-4.

[18] G. Lambrecht *et al.*, "The role of physiotherapy in the European Space Agency strategy for preparation and reconditioning of astronauts before and after long duration space flight," *Musculoskelet. Sci. Pract.*, vol. 27, 2017, doi: 10.1016/j.math.2016.10.009.

[19] I. B. Kozlovskaya, E. N. Yarmanova, and E. V. Fomina, "The Russian system of preventive countermeasures: Its present and future," *Hum. Physiol.*, vol. 41, no. 7, pp. 704–711, 2013, doi: 10.1134/S0362119715070075.

[20] I. B. Kozlovskaya, I. D. Pestov, and A. D. Egorov, "The system of preventive measures in long space flights.," *Hum. Physiol.*, vol. 36, no. 7, pp. 773–779, 2010, doi: 10.1134/S0362119710070066.

[21] I. B. Kozlovskaya, A. I. Grigoriev, and V. I. Stepantzov, "Countermeasure of the negative effects of weightlessness on physical systems in long-term space flights," *Acta Astronaut.*, vol. 36, no. 8–12, pp. 661–668, 1995, doi: 10.1016/0094-5765(95)00156-5.

[22] E. V. Fomina, A. O. Savinkina, and E. N. Yarmanova, “Ground reaction force values in cosmonauts during locomotor exercises on board the International Space Station,” *Hum. Physiol.*, vol. 43, no. 5, pp. 542–548, 2017, doi: 10.1134/S0362119717050048.

[23] C. McGregor, “A platform for real-time online health analytics during spaceflight,” *IEEE Aerosp. Conf. Proc.*, 2013, doi: 10.1109/AERO.2013.6497382.

[24] C. Mcgregor, “A Platform for Real-Time Space Health Analytics as a Service Utilizing Space Data Relays,” 2021.

[25] J. M. Eklund and C. McGregor, “Real-time online health analytics for interplanetary space missions,” *IEEE Aerosp. Conf. Proc.*, pp. 1–10, 2014, doi: 10.1109/AERO.2014.6836458.

[26] H. Khazaei, N. Mench-Bressan, C. McGregor, and J. E. Pugh, “Health Informatics for Neonatal Intensive Care Units: An Analytical Modeling Perspective,” *IEEE J. Transl. Eng. Heal. Med.*, vol. 3, no. September, pp. 1–9, 2015, doi: 10.1109/JTEHM.2015.2485268.

[27] C. Inibhunu, R. Jalali, I. Doyle, A. Gates, J. Madill, and C. McGregor, “Adaptive API for Real-Time Streaming Analytics as a Service,” *41st Int. Eng. Med. Biol. Conf.*, pp. 3472–3477, 2019.

[28] C. McGregor, “A cloud computing framework for real-time rural and remote service of critical care,” *Proc. - IEEE Symp. Comput. Med. Syst.*, pp. 1–6, 2011, doi: 10.1109/CBMS.2011.5999037.

[29] C. McGregor, “Big Data in Critical Care Using Artemis,” *Signal Process. Mach. Learn. Biomed. Big Data*, pp. 519–531, 2018, doi: 10.1201/9781351061223-26.

[30] C. McGregor, B. Bonnis, B. Stanfield, and M. Stanfield, “Integrating Big Data analytics, virtual reality, and ARAIG to support resilience assessment and development in tactical training,” *2017 IEEE 5th Int. Conf. Serious Games Appl. Heal. SeGAH 2017*, pp. 1–7, 2017, doi: 10.1109/SeGAH.2017.7939256.

[31] C. McGregor, F. M. Williams-Bell, and B. Bonnis, “Using Streaming Big Data for Resilience Assessment within Pre-service Firefighter Extreme Condition Training,” *9th Annu. Mil. Veteran Heal. Res. Forum*, p. 29, 2018.

[32] A. Prysyazhnyuk, C. Mcgregor, E. Bersenev, and A. V. Slonov, “Investigation of adaptation mechanisms during five-day dry immersion utilizing big-data analytics,” *2018 IEEE Life Sci. Conf. LSC 2018*, pp. 247–250, 2018, doi: 10.1109/LSC.2018.8572155.

[33] J. Yeung and C. McGregor, “Countermeasure Data Integration within Autonomous Space Medicine: An Extension to Artemis in Space,” in *IEEE Life Sciences Conference*, 2018, pp. 251–254.

[34] J. Yeung and C. McGregor, “Analyzing countermeasure effectiveness utilizing big data analytics for space medicine decision support: A case study,” *Proc. Int. Astronaut. Congr. IAC*, vol. 2019-Octob, no. October, pp. 21–25, 2019.

[35] J. Yeung and C. Mcgregor, “An Individualized Countermeasure Assessment Framework for Astronauts in Space,” in *IEEE Aerospace Conference*, 2021, pp. 1–9.

[36] R. M. Baevskii and A. G. Chernikova, “Assessment of adaptation risk in an individual prenosological monitoring system,” *Neurosci. Behav. Physiol.*, vol. 46, no. 4, pp. 437–445, 2016, doi: 10.1007/s11055-016-0255-4.

[37] R. M. Baevskii, “Analysis of heart rate variability in space medicine,” *Hum. Physiol.*, vol. 28, no. 2, pp. 202–213, 2002, [Online]. Available: http://link.springer.com/article/10.1023/A:1014866501535.

[38] O. Orlov, C. McGregor, R. Baevsky, A. Chernikova, A. Prysyazhnyuk, and V. Rusanov, “Perspective Use of the Technologies for Big Data Analysis in Manned Space Flights on the International Space Station,” *68th Int. Astronaut. Congr. (IAC 2017)*, 2017.

[39] R. M. Baevsky, A. G. Chernikova, I. I. Funtova, and J. Tank, “Assessment of individual adaptation to microgravity during long term space flight based on stepwise discriminant analysis of heart rate variability parameters,” *Acta Astronaut.*, vol. 69, no. 11–12, pp. 1148–1152, 2011, doi: 10.1016/j.actaastro.2011.07.011.

Chapter 4. Framework for Countermeasure and Intervention Decision Support

This chapter presents the details of this proposed framework that extends components for big data health analytics to enable a clinical and countermeasures decision support system. Data Collection and Acquisition, Transmission, Transformation, Data Analytics, Information Exploration, and Data Storage are components that have been presented within existing frameworks presented in [1]–[3]. These components within those frameworks presented in [2], [3] have been instantiated in the big data analytics platform, Artemis Cloud. Depicted in Figure 2-3 and Figure 3-4, those frameworks, fall short of enabling remote clinical care support from a separate (off-site) clinical management center or healthcare provider which would include its own control server, separate from the local server at the remote location. As such, the first extension to note as proposed in this framework builds upon the components of the framework presented by McGregor in [4], [5]. Also presented within the context of supporting online health analytics for PHM of astronauts in spaceflight, components in that framework (Result Presentation, Data Persistency, Knowledge Extraction, and (re)Deployment) are mirrored at a Clinical Management Center. In the case study presented in Chapter 5, these components are proposed to be mirrored at Mission Control as they are onboard the Spacecraft [5]. As such, the proposed framework of this thesis extends the mirrored components within a decoupled framework to support a Remote Location and Clinical Management Center, which are represented by the top and bottom portions of Figure 4-1 respectively.

The second extension to the existing framework extends the Data Analytics and Information Exploration components to be informed with countermeasure and intervention activities. This extension builds upon the framework that has been presented by Yeung and McGregor in [3], which limited integration of countermeasure data within the Data Collection and Data Acquisition components only.

To enable this extension, the third extension to this framework includes the addition of a feedback mechanism in the remote closed-loop environment thereby enabling autonomous health monitoring and reporting capabilities to users, as well as simultaneous Clinical and Countermeasures Decision Support and individualized reporting and intervention assessment capabilities, which can also be mirrored at the Clinical Management Center. Within a clinical context, the goal of this contribution is to ultimately provide users with near real-time opportunities to conduct appropriate intervention immediately if a countermeasure activity is performed. The extended components noted of this extension are outlined in red of Figure 4-2.

Finally, the fourth extension within this proposed framework is the centralized approach for data transmission between the Remote Location and Clinical Management Center. This extension also builds upon the work presented within the context of space medicine by McGregor in [5] as well as by Eklund and McGregor in [6].

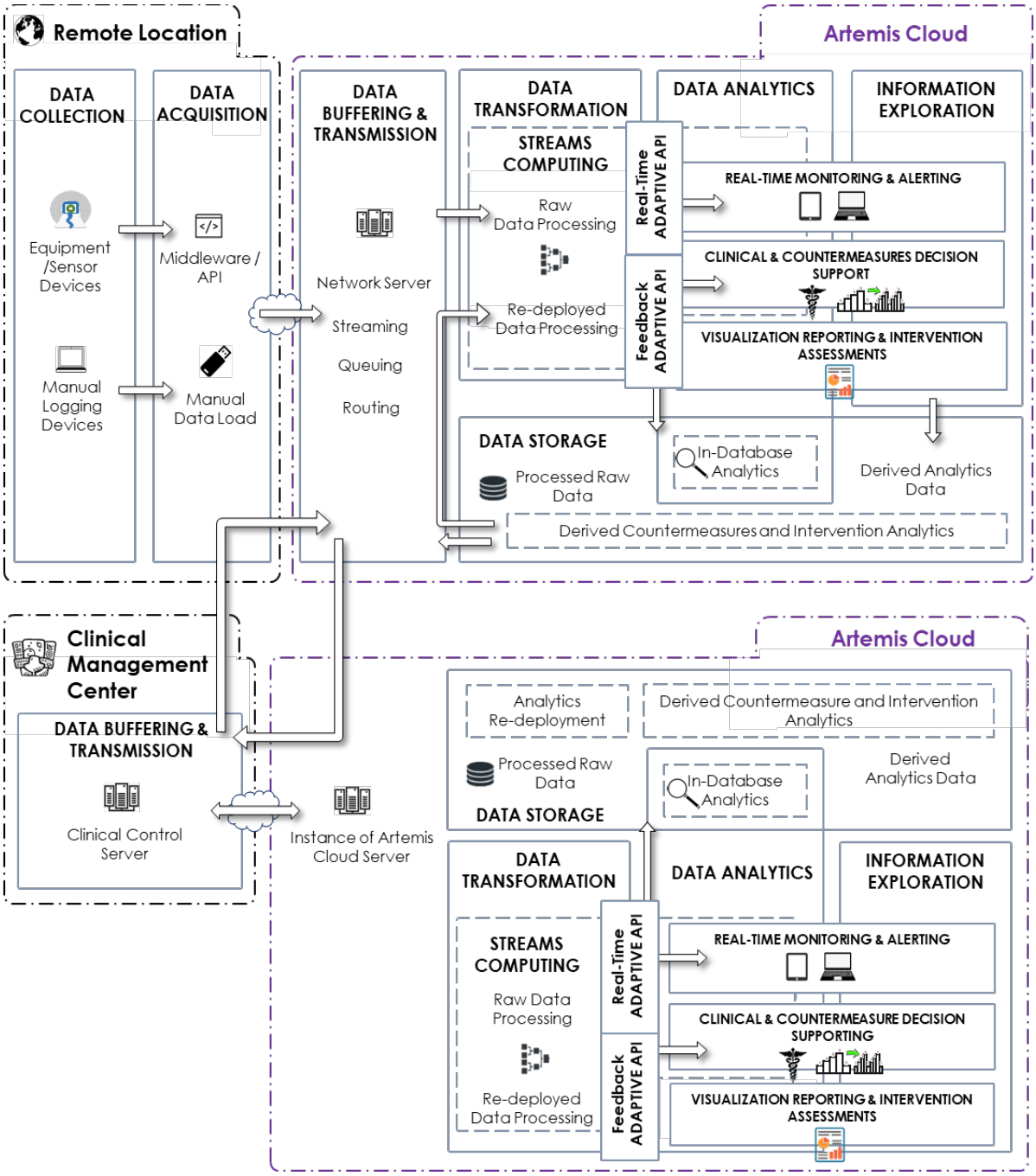

Figure 4-1 – Extended Big Data Health Analytics Framework for Autonomous and Remote Real-Time Monitoring (adapted from [10])

4.1 Data Collection – Remote Location

The Data Collection component of this framework has been designed to enable data collection from a large range of data generation sources [7]. Existing frameworks that have been previously instantiated within the Artemis and Athena platform have enabled data collection from medical devices and bio-monitors and wearable garments. This thesis proposes to extend this data collection component to include data sources that also generate environmental or mechanical equipment data and manual input of miscellaneous data.

Existing physiological data parameters that have been collected previously within the Artemis platform include heart rate, blood pressure, electrocardiogram, blood oxygen saturation level, skin and/or body temperature, respiratory rate, and muscle volume. Depending on capabilities of the wearable technology employed, continuous second-by-second data values can be generated into high frequency data streams [7].

Environmental and/or Mechanical data parameters may include activity protocol, tread/cycle speed, load volume, load weight of harness exerted on the harness that enables the astronaut to run on the treadmill in microgravity, running/cycling distance, pedal rate, power wattage, and temperature of the motor box on the treadmill or CEVIS. Depending on the data generation capabilities of the countermeasure equipment or device employed for monitoring, data values can be generated into data streams [8].

Activity data parameters may include changes to pre-programmed protocols, target versus actual workloads, mechanical equipment issues/failures, and even

comments or miscellaneous manual input as provided by the user. A key element of this components to note is that not all data generation sources will generate high frequency data. Some data collection may be discontinuous and retrospective.

The goal of extending this component aims to integrate countermeasure data collected from devices and equipment and other integrated sensors within the desired monitored closed-loop system. This also includes the capability of integrating activity or event data necessary to identify specific countermeasure or preventive activity conducted. Countermeasure data that can currently be considered for integration includes three data sources: 1) wearable sensors for data pertaining to physiology, 2) device and/or machine sensors pertaining to the equipment used and/or the surrounding external environmental condition, and 3) manual logging of tracked activities conducted or events performed. Any type of data generated from a user's perspective on any sensor, equipment, and/or device can be gathered in preparation for the next component of this framework, the Data Acquisition component. Countermeasure data types may include: activity protocol, tread/cycle speed, load volume, load intensity, running distance, effective cycling distance, pedal rate, power wattage, elapsed time, and ambient temperature. This information is typically pre-programmed into the equipment according to the specified activity protocol and data values may be expected to remain characteristically static. However, the data generated and streamed is dependent upon the streaming capabilities of the equipment employed. For example, for a user on a cycle ergometer who is advised to follow a prescribed protocol, the actual pedal rate and power wattage over their elapsed exercise time may deviate, which would generate different

data values if the ergometer was equipped with sensors to stream second-to-second values. In addition, mechanical data such as static loading and weights and training intervals may require manual collection. Should the user make any changes to the equipment or device as a result of an intervention decision, the change in countermeasure data parameters may be ingested seamlessly within this component for downstream analytics.

In addition to the countermeasure data previously outlined, the third type of data that can be collected may be tracked and logged data and thus, manual data collection must be considered. This type of data collection would allow a user to input activities conducted and specify any miscellaneous events that occur. This may include: (intervention) changes to pre-programmed protocols during countermeasure activities, target versus actual workload deviations, and mechanical equipment issues, failures, or any mechanical malfunctions. Manual data may not occur frequently, however, ingestion of this type of static data enables temporal countermeasure deviations to be tracked.

The different parameters that are required for monitoring, processing, analytics, and knowledge generation would require different dataset and parameters. This would require data ingestion mechanisms that are structured specifically for the desired algorithmic consumers in the Adaptive APIs discussed in the Data Analytics component sub-section. Provided that data characteristics within the Data Collection component are determined and appropriately defined, this extended framework is designed to meet various sources of data ingestion requirements. Table 4-1 details the data types that can be sourced within this extended framework.

Table 4-1 – Possible data type sources collected in this extended framework including parameters, ingestion characteristics like frequency, and data ingestion structure

Data Type Sources	***Possible Data Parameters***	***Data Ingestion Characteristics***	***Possible Data Ingestion Structure***
Physiological	Heart Rate (HR), Blood Pressure (BP), Electrocardiogram (ECG), Blood Oxygen Levels (SpO_2), Skin/Body Temperature, Respiratory Rate (RR), Muscle Volume	1Hz 250Hz 1000Hz	Continuous Big Data Streaming Retrospective
Environmental and/or Mechanical	Activity Protocol, Tread/Cycle speed, Load Volume, Load Intensity, Running Distance, Effective Cycling Distance, Pedal Rate, Power Wattage, Elapsed Time, Temperature	1Hz Digitally stored one-time input into machine Manual observation of parameter readings such as pedal rate	Continuous Discontinuous High Volume Streaming Retrospective
Manual Input	Changes to pre-programmed protocols, target vs actual workloads, mechanical equipment issues/failures	Manual input	Discontinuous Retrospective

4.2 Data Acquisition – Remote Location

The Data Acquisition component of this extended framework is designed to obtain data from multiple data collection devices that generate high frequency data streams. Within the existing framework, data acquisition can be a direct transmission sourced from wired and/or wireless sensor devices with a data output and/or transmitting mechanism. Data can be streamed wirelessly and in real-time provided that an optimized connectivity protocol is available. Acquisition may also be a retrospective transfer.

This framework extends the Data Acquisition component by enabling data acquisition for different devices and equipment utilized for countermeasure intervention activities. As such, this method is dependent on the desired countermeasure device or equipment used for individualized monitoring and intervention as necessary. Acquisition methods differ as various countermeasure equipment have different usages, different sampling frequencies, and different parameters collected. For example, some countermeasure equipment features data collection and storage on a PCMCIA cards or a flash drive. Such devices require retrospective data acquisition Upon completion of the countermeasure activity, the user can then upload data from a medium onto the designated computer for Data Buffering and Transmission.

4.3 Data Buffering and Transmission – Remote Location

As with the existing framework upon which this was based, buffering and transmission of data within this framework is designed to accommodate data movement within any given bandwidth and network connection protocol available at the local remote location, as well as requirements to transmit data a part from the remote location, such as to a Clinical Management Center. Data ingested into this framework is subject to specific routing and queuing rules depending on the queuing software or API used. More specifically, queuing requirements must be met through understanding the datasets of each parameter ingested. These design requirements require knowledge on how the data parameter is structured—for example, length of dataset and standard format of the data packets. Retrospective data are typically pulled from flat files such as, .CSV or .TXT, and

would not require a buffering or queuing mechanism as the data is not expected to be generated at a high frequency. However, if the capability to stream in real-time is required of the solution, knowledge of the frequency of data generation and streaming would be necessary to design a suitable framework. Second-by-second generated data values, as an example, would be classified as high frequency data streaming and would require a reliable queuing mechanism that would not result in lost data packets.

The specific functions within this component is also dependent on local network availability and capability. An optimal protocol to acquire data from the Data Acquisition component should be utilized for multi-streaming of big data via multiple devices. With wireless devices employed to collect data for real-time monitoring, this component must have the capability to accommodate multiple wireless device connectivity and multi-streaming through the local network.

Similar to the existing framework, the countermeasure data is integrated at a remote location. The data buffer and transmission within this framework is the first component to interface with the Clinical Management Center of interest. Due to the fact that internet connectivity and bandwidth speeds from control centers to geographically remote areas around the world is still subject to varying delays, an appropriate queuing architecture leveraging free space optical networks should be considered toward an optimized design of this framework [9]. This would provide a reliable functionality to ensure that all ingested data remains queued and ready for transmission whenever streaming capability is possible [8].

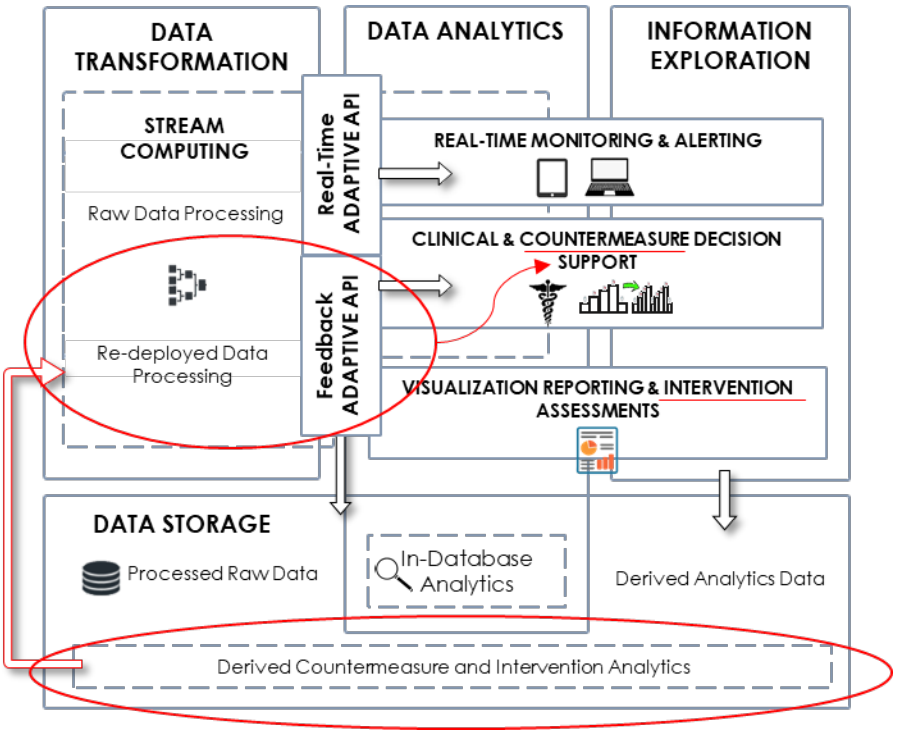

Figure 4-2 – Feedback Data Flow of Countermeasure Data and Derived Analytics Within Extended Framework

4.4 Data Transformation – Remote Location

The Data Transformation component within this framework prepares all transmitted data for downstream analytics and utilises the same principles as the Data Transformation component within the framework upon which the Artemis platform is based. This allows ingestion of multiple data streams and publishes each data stream to other processes downstream. This processing is designed with adaptive API agents such as the built-in Real-Time Streaming Adaptive API agent first designed for physiological data streams in [2]. In addition to the Real-Time Adaptive API integrated within the existing framework presented in [10], a feedback adaptive API must be created for the feedback of countermeasure data and associated derived analytics. Figure 4-2 depicts the flow of derived countermeasure data and intervention enabled analytics fed back into the

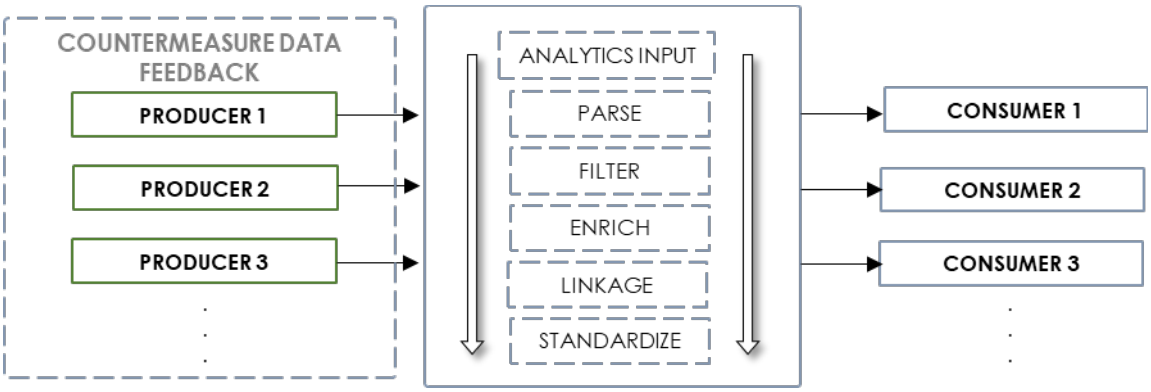

Figure 4-3 – A Feedback Adaptive API adapted from [2] *to Stream Derived Countermeasure and Intervention Analytics*

Data Transformation component from Data Storage. This process was developed mirroring that of which the Real-Time Streaming Adaptive API agent discussed in [2] represents. Thereby countermeasure data as feedback enabled by a Feedback Adaptive API countermeasure data by ingesting the analytics input, parsing and filtering the data, enriching it, and performing necessary dataset linkages to standardize each data stream for further processing by downstream consumption by other services, which may include storage systems, machine learning algorithms, and other analytics services, as depicted in Figure 4-3 [2]. Here, data processing for downstream consumers within the Feedback Adaptive API is a necessary mechanism as this publishes the data streams as topics for consumption by desired analytics modules in order to enable a Countermeasure Intervention Decision Support system within a computing platform that instantiates this extended framework.

To enable these processes in the Data Transformation component, this framework currently is designed to utilize of the IBM Infosphere Streams computing application for stream computing, which enables continuous ingestion of data, continuous run of query applications, and continuous generation of data stream results as tuples [11].

Furthermore, the adaptability of the IBM Infosphere Streams computing application enables seamless feedback ingestion of the countermeasure data. With known data structure input into a stream application, individual operators can implement algorithms for analysis in the preceding component, Data Analytics.

4.5 Data Analytics – Remote Location

The Data Analytics component of this framework builds upon the existing framework instantiated in Artemis Cloud and enables countermeasure data analytics derived to support Countermeasure Intervention Decision activities. Within the Data Analytics component, analytics modules can be created within the Streams computing application are designed to consume published data streams produced within the Real-Time Adaptive API agent described in [2] and the Feedback Adaptive API agent described in the Data Transformation section. As such, published data topics streamed within a Feedback Adaptive API are provisioned with the relevant pre-programmed algorithms as

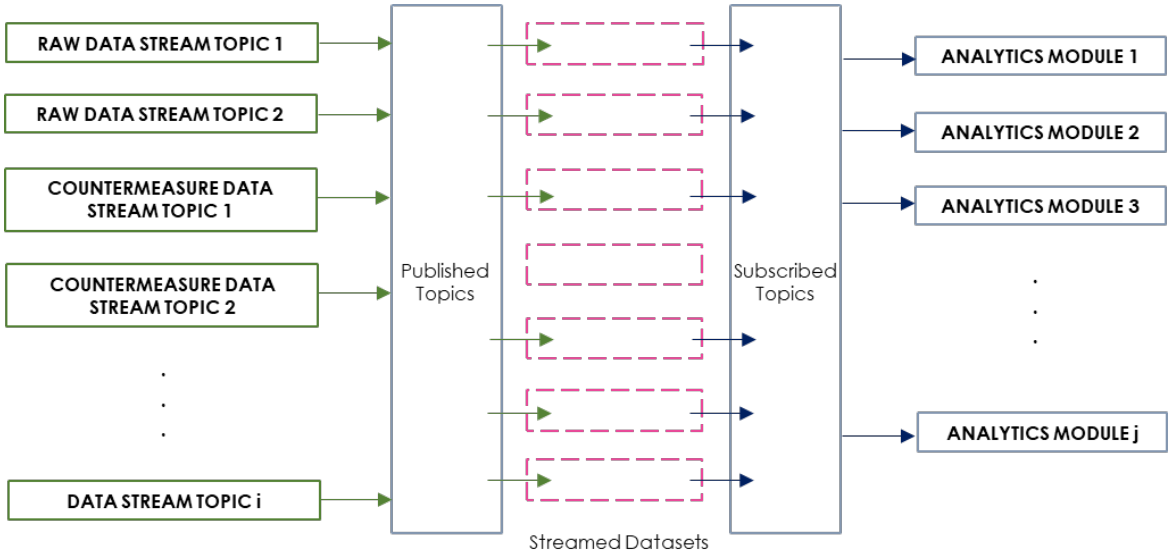

Figure 4-4 – Flow Diagram of Analytics Module of Streamed Datasets as Data Stream Topics adapted from [2]

Analytics Modules to support countermeasure analytics in real-time, retrospectively, and as a feedback component within this framework.

Depicted in Figure 4-4, adaptive API agents within this framework mirrors the design of the Real-Time Streaming Adaptive API in [2] to allow for parallel publishing of consistent data streams, which can individually be subscribed to by analytics modules as needed. This approach extends the function of the adaptive APIs introduced from the Data Transformation component into this component as modular algorithms can consume the relevant stream topics as needed and depending on what is required by individual Analytics Topic modules. Multiple algorithms can therefore be enabled within their respective analytics modules for any subscribed topics. Algorithms within the Streams Computing application can be designed to communicate with each other to use the same data for processing by subscribing only to the required data stream topic. Any algorithms that require the same data for processing, subscribes to the data stream topic that is published by adaptive API agents as described in the Data Transformation component. As such, this extended component is provisioned with three mechanisms, labelled in this thesis as 'sub-components'. These sub-components enable predictive diagnostics and prognostic analytics for: 1) Real-Time Monitoring and Alerting, 2) Clinical and Countermeasure Decision Support, and 3) Visualization Reporting and Intervention Assessments.

4.5.1 Real-Time Monitoring and Alerting

This sup-component is one of three that interfaces with the Data Analytics and Information Exploration components. Built upon the existing framework behind Artemis

Cloud that enables real-time monitoring and alerting to provide real-time monitoring of physiological data parameters. This extension enables real-time monitoring of countermeasure data parameters as well as the reflection of parameters that are generated from countermeasure derived analytics as feedback to the user. Raw data sources (eg. Physiological, device/machine, training protocol) collected from the Data Collection component, in addition to re-deployed countermeasure data and derived analytics from the Data Analytics component can be observed in real-time. Specifically designed functional algorithms for training and performance, countermeasure regimen optimization, rehabilitation, and general medicine and intervention support can be enabled thereby providing the ability to support real-time monitoring and alerting. Observation of data streams captured from monitors and countermeasure equipment may also be monitored.

4.5.2 Clinical and Countermeasure Decision Support

This second sub-component of three that interfaces with the Data Analytics and Information Exploration components, extends existing Clinical Decision Support abilities described in [1], [2]. In addition to clinical decision support, this extension is designed to enable a countermeasure decision support system that supports countermeasure feedback for users, based on their individual physiological and training data, thereby enabling intervention support. Data from countermeasure activities conducted is subjected to transformation and processing as described in the Data Transformation and Data Analytics components within the adaptive APIs. Observation of individualized health trajectories is immediate whilst the user is actively training, thus providing opportunity

for the individual to perform any interventions as required. This sub-component enables custom intervention support based on individualized data analytics. Furthermore, medical support teams and training staff not within the local vicinity of the community they support would also be able to conduct real-time and retrospective information exploration activities to enhance countermeasure training for each individual's physiological, health, and performance trajectories.

4.6 Information Exploration – Remote Location

Working in conjunction with the Data Analytics component, the Information Exploration component is also built upon the same principles in the existing framework and enables presentation of all data including derived analytics generated for 1) Real-Time Monitoring and Alerting, 2) Clinical and Countermeasure Decision Support, and 3) Visualization Reporting and Intervention Assessments. Additional knowledge extraction activities can be performed locally and re-deployed following successful intervention activities at the discretion of the user. This component is critical in presenting relevant information back to the user, particularly toward understanding the impact of their countermeasure activity conducted as any desired intervention toward optimizing their health and performance could then be actioned immediately.

4.6.1 Visualization Reporting

Finally, the third sub-component that interfaces with the Data Analytics and Information Exploration components of this extended framework is demonstrated in a

Countermeasure Decision Support case study described in [3]. Upon the framework described in [3], this sub-component supports individual performance reporting and individualized assessments. Capabilities to report multiple physiological parameters and impact of external environment and/or countermeasure activities is enabled in this sub-component. As such, physiological data associated with respective countermeasure activities conducted and events that occur can be represented via a visual assessment reporting tool in support of Countermeasure Intervention Decision Support activities. Primed with functional adaptive algorithms as noted in the Countermeasure Decision Support component, individual health trajectories for prognostic health and training monitoring can be reported.

4.7 Data Storage – Remote Location

The Data Storage component allows storage of all data topics generated from the adaptive API as well as the derived analytics generated from the Data Analytics Component and additional knowledge extracted from the Information Exploration component as needed. The design of data persistency and data storage for retroactive knowledge discovery is critical to advance prognostic and clinical algorithms for redeployment back into the Data Analytics component. Data persistency and storage in this component is critical for new knowledge derivation in retroactive research, re-engineered algorithms, and optimized codes to prepare for redeployment enhanced analytics. Within this thesis, the data model has been extended to include countermeasure data storage and derived countermeasure analytics storage.

Furthermore, the Streams Computing application enabled within the Data Analytics component allows for countermeasure-sourced data storage, thereby expanding the existing data warehouse structure for storage of raw physiological data and derived analytics, raw countermeasure data, as well as derived countermeasure analytics data. In particular, In-Database Analytics for retrospective analysis and knowledge discovery may still be performed while countermeasure impact may still be stored as derived countermeasure analytics data for real-time observation and retrospective review. This capability is dependent upon the visualization medium deployed and service requirements of the user desired in the Information Exploration component.

4.8 Data Buffering and Transmission – Clinical Management Center

This component is designed to provision this framework with a centralized network communication system to ensure data safety and governance. This component is designed to be stationed at the Clinical Management Center of interest and enables data streaming, queueing, and routing, to and from its twin component at the Remote Location. The design of such a system has recently been published in a conference paper by McGregor who proposes a framework that utilizes a deep space hybrid data relay network enabled by optical and radio frequency satellites, thereby providing Space Data Relay as a Service (SDRaaS) [12].

4.9 Data Transformation – Clinical Management Center

Clinical specialists and countermeasure experts require the ability to support clients remotely. To leverage the greater resources that are not available at the Remote Location, the Clinical Management Center would require the same (if not more) extensive ability to prepare and process raw and re-deployed data that is at the Remote Location. This component is designed with the same adaptive APIs described in the Data Transformation component at the Remote Location. Further to this, derived countermeasures and intervention analytics that are redeployed at the Remote Location are designed to be mirrored at the Clinical Management Center also.

4.10 Data Analytics – Clinical Management Center

Information and knowledge can be derived from acquired data at the Clinical Management Center as it is performed at the Remote Location. Algorithms that enable observations of space physiology and countermeasures performed are provisioned as the mirrored Data Analytics component at the Remote Location. The Real-Time Streaming Adaptive API and the Feedback Adaptive API can both be deployed utilizing the Stream computing application. Data analytics can also be performed retrospectively using data stored within the Data Storage layer at the Clinical Management Center. Here, health monitoring in real-time can be enabled and an alerting mechanism can be developed to notify the remote specialist or expert on-call in case of emergencies. This component further advances knowledge to inform the specialist or expert to provide clinical and

countermeasure decision support without increasing the frequency of “patient check-ins”.

4.11 Information Exploration – Clinical Management Center

The Information Exploration layer provides the remote specialist or expert with the ability to access derived and raw data for exploratory and observation purposes. More specifically, passive Visualization Reporting and Intervention Assessments may be provided at the Clinical Management Center on a more detailed level as required. Active visual analytics may be provided within this component as required in order to support active countermeasure performances as they are conducted in real-time. Visuals can be tailored for different audiences such as the individual user themselves at the Remote Location, or a medical surgeon, a physiotherapist, or a trainer at the Clinical Management Center.

4.12 Summary of Framework

In summary, this framework consists of seven components that each perform specific functions to support the extended capability of monitoring countermeasure activities. It incorporates holistic design factors to provide local and remote-based healthcare and countermeasure analytics for continuous health monitoring and to provision users at a Remote Location with a Clinical and Countermeasure Decision Support system. These components are described as part of an online platform to serve

users autonomously in a remote location with real-time reporting capabilities, while simultaneously supporting data transmission to a remote Clinical Management Center where it is expected that capabilities and resources are readily available rather than at the Remote Location.

This chapter has presented the proposed framework with extended components to enable data collection and acquisition, transformation, analytics, information exploration and knowledge extraction, and data storage with integration of countermeasure data as a feedback component of data flow within this framework. The extensions presented in this chapter further enrich users at a remote location with deeper knowledge about their countermeasure and intervention activities performed that are desired for monitoring. The instantiation and application of this proposed framework is presented in the following chapters. Chapter 5 instantiates this framework by extending the Artemis platform within the context of monitoring astronauts on the ISS. This application will be described in theory. Chapter 6 instantiates this framework by extending the Artemis platform as well as leveraging principles from the existing Athena platform within the context of monitoring firefighters in a stimulated extreme cold environment. This application will also be described in theory to demonstrate the capability of this computing technology as an analogue for assessing the same countermeasure activities conducted in space on the ISS by astronauts and by the firefighters on Earth in an extreme cold environment.

REFERENCES

[1] Y. Wang, L. A. Kung, and T. A. Byrd, "Big data analytics: Understanding its capabilities and potential benefits for healthcare organizations," *Technol. Forecast. Soc. Change*, vol. 126, pp. 3–13, 2018, doi: 10.1016/j.techfore.2015.12.019.

[2] C. Inibhunu, R. Jalali, I. Doyle, A. Gates, J. Madill, and C. McGregor, "Adaptive API for Real-Time Streaming Analytics as a Service," *41st Int. Eng. Med. Biol. Conf.*, pp. 3472–3477, 2019.

[3] J. Yeung and C. McGregor, "Analyzing countermeasure effectiveness utilizing big data analytics for space medicine decision support: A case study," *Proc. Int. Astronaut. Congr. IAC*, vol. 2019-Octob, no. October, pp. 21–25, 2019.

[4] C. McGregor, "A platform for real-time online health analytics during spaceflight," *IEEE Aerosp. Conf. Proc.*, 2013, doi: 10.1109/AERO.2013.6497382.

[5] C. McGregor, "A framework for online health analytics for advanced prognostics and health management of astronauts," *Aerosp. Conf. 2015 IEEE*, pp. 1–7, 2015, doi: 10.1109/AERO.2015.7119301.

[6] J. M. Eklund and C. McGregor, "Real-time online health analytics for interplanetary space missions," *IEEE Aerosp. Conf. Proc.*, pp. 1–10, 2014, doi: 10.1109/AERO.2014.6836458.

[7] S. Laxman and P. S. Sastry, "A survey of temporal data mining," *Sadhana*, vol. 31, no. 2, pp. 173–198, 2006, doi: 10.1007/BF02719780.

[8] C. Inibhunu, J. Yeung, A. Gates, B. Chicoine, and C. McGregor, "A Decoupled Data Pipeline and its Reliability Assessment: Case Study in Extreme Climatic Humans Studies," 2021.

[9] H. Kaushal and G. Kaddoum, "Optical Communication in Space: Challenges and Mitigation Techniques," *IEEE Commun. Surv. Tutorials*, vol. 19, no. 1, pp. 57–96, 2017, doi: 10.1109/COMST.2016.2603518.

[10] J. Yeung and C. McGregor, "An Individualized Countermeasure Assessment Framework for Astronauts in Space," in *IEEE Aerospace Conference*, 2021, pp. 1–9, doi: 10.1109/aero50100.2021.9438512.

[11] R. Z. Bhatti *et al.*, "Stream Computing Platforms, Applications, and Analytics," *IBM Research*. https://researcher.watson.ibm.com/researcher/view_group.php?id=2531.

[12] C. Mcgregor, "A Platform for Real-Time Space Health Analytics as a Service Utilizing Space Data Relays," 2021.

Chapter 5. Case Study for Monitoring Astronauts in Space

This chapter presents the first case study utilized to demonstrate the framework described in the previous chapter. This case study details the application of the framework that enables a holistic methodology towards supporting an autonomous Countermeasure Decision Support System for astronauts within a closed-loop environment. In the following case study, the ISS is considered a closed-loop environment. In addition, this case study supports the application of the proposed methodology to enable an autonomous individualized health monitoring capability for astronauts in space. Remote monitoring and individualized assessments of countermeasure impacts may also be enabled by the feedback mechanism provisioned within the extended framework instantiated in the online analytics platform, Artemis [1]. As such, this case study presents the proposed framework as it would apply to monitoring individual astronauts on a space mission on the ISS.

5.1 Methodology to Monitor Astronaut Health and Countermeasures in Space

Currently, monitoring astronaut health in space and reviewing their countermeasure protocols consists of offline reviews and are conducted once per week [2]. These countermeasure protocols consist of exercises and intervention activities that are suggested based on generally known physiological conditions due to microgravity. However, these reviews are not conducted in an appropriately timed manner to mitigate long-term impact to an astronaut's physiology after their return to Earth. In this chapter's demonstration of clinical and countermeasure decision support integrated into this

extended big data and online health analytics framework, existing equipment on the ISS that has reporting capabilities are the countermeasure data sources discussed for Data Collection. As such, different data characteristics traits are discussed as well to consider different Data Acquisition mechanisms in support of existing data acquisition methods that are currently in place. Streaming capabilities, bandwidth availability, and data buffering and queueing factors onboard the ISS are discussed in the Data Buffering and Transmission section. The Data Transformation and Data Analytics sections discuss sub-components that integrate derived countermeasure data from the Data Storage component. This enables the feedback mechanism to support astronauts to conduct appropriate intervention immediately via monitoring, alerting, and visualization capabilities enabled by the Real-Time Monitoring and Alerting and Visualization Reporting sub-components.

Figure 5-1 depicts the extended framework that is instantiated utilizing the Artemis platform. The seven major components (Data Collection, Data Acquisition, Data Buffering and Transmission, Data Transformation, Data Analytics, Information Exploration, and Data Storage) and the three sub-components (Real-time Monitoring and Alerting, Clinical and Countermeasure Decision Support, and Visualization Reporting) are described as they would operate on the ISS. Four of the seven components (Data Transformation, Data Analytics, Information Exploration, and Data Storage) are instanced at Mission Control Center on Earth making Data Analytics and Information Exploration available for Earth-bound support from medical officers and clinical staff.

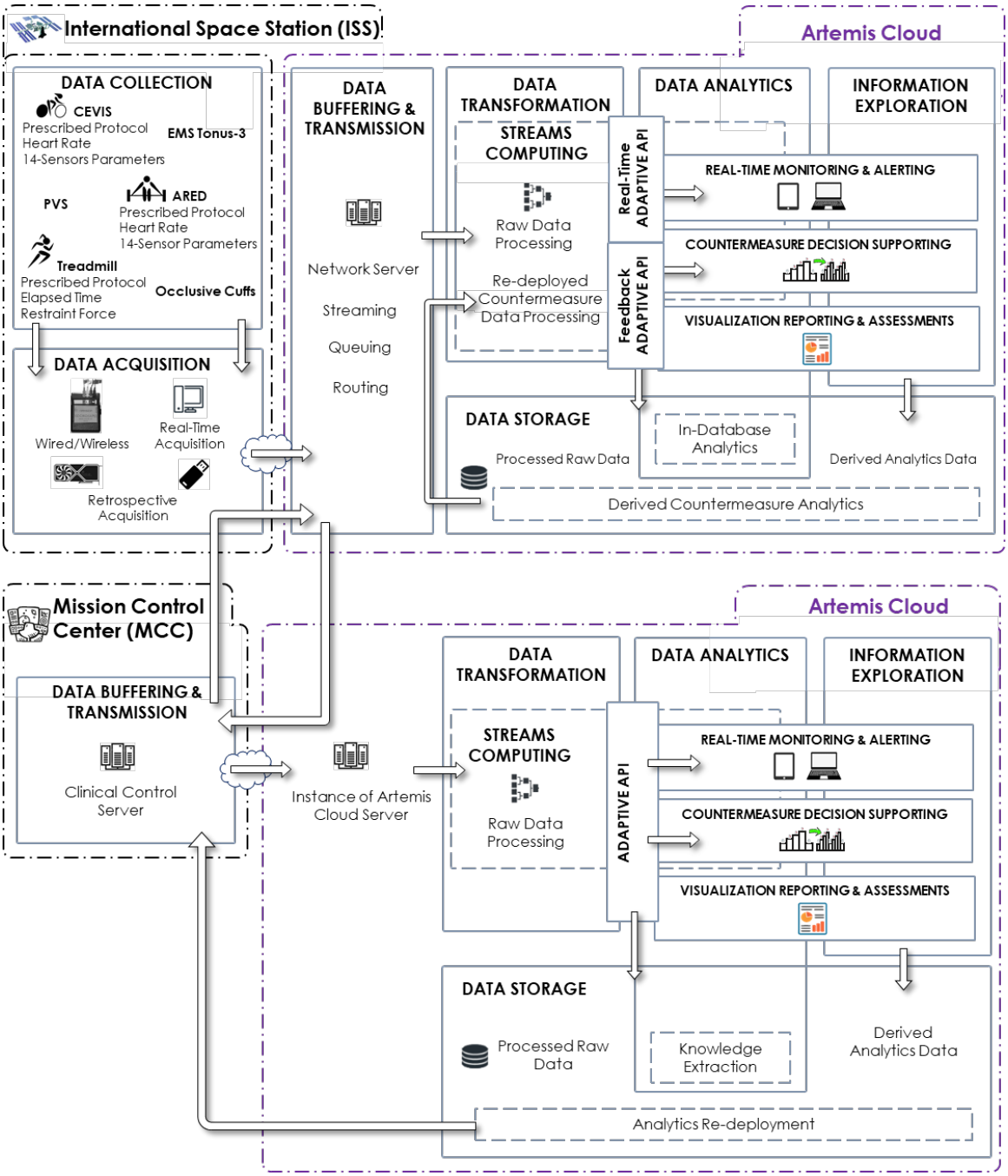

Figure 5-1 – Framework for Integrated Countermeasure Feedback Toward Supporting Real-Time Monitoring and Alerting and Countermeasure Decision Support Using Big Data Analytics

5.1.1 Data Collection – Space Station

Data collection on the ISS can be sourced from existing equipment that already collect data when countermeasure activities are being conducted. Physiological data collection can be from approved and commissioned physiological data acquisition devices such as the Cosmocard device and the Astroskin which were approved and commissioned for experiments on the ISS described in [3], [4]. Mechanical data can be collected by integrated sensors from existing countermeasure equipment commissioned within the space station. Yeung & McGregor in [5] outline details of the three major countermeasure equipment that are currently commissioned on the ISS, of which the Artemis platform is capable of collecting data from, namely: 1) the CEVIS, 2) the BD-2 Treadmill (also known as T2 or COLBERT), and 3) the ARED. Table 5-1 outlines the current data sources that pertain to countermeasures on the ISS as well as the data parameters currently collected.

The CEVIS, which provides aerobic and cardiovascular exercise capabilities, consists of a control panel which collects workload data, cycling speed, heart rate, elapsed time, and details of exercise prescriptions. In addition, the Portable Pulmonary Function System (PPFS) measures the individual astronaut's oxygen uptake and ECG whilst exercise is performed. Upon session completion, all data from the CEVIS which are currently saved on a data file on the equipment's control panel is automatically transferred to the station's data server, where the Artemis platform is capable of collected data files from for Data Acquisition [6].

The BD-2 Treadmill plays a vital part in astronaut countermeasure regimens on the ISS. Also known as the Treadmill with Vibration Isolation and Stabilization (TVIS)

device, the treadmill consists of an interconnected system of components to stabilize the running surface of the treadmill in microgravity, to control the pitch and roll forces transferred from the astronaut exercising, to manage the mechanical switches of the SLD that keeps the astronaut on the running surface, and to send control signals to the motor controllers to activate the tread speed. Parameters such as belt speed, restraint force, distance, elapsed time, heart rate, gyro speed, exercise protocol, actual protocol performed, time stamp, electronics box temperature, and motor box temperature are collected, all of which is data stored in an LCD and PCMCIA card [7]. The treadmill can operate in one of two modes: motorized and non-motorized. To operate the treadmill in the non-motorized mode is dependent upon the astronaut's effort against the resistance to the belt motion, which is manipulated a braking system. The braking parameter is not currently known for data collection. Upon exercise completion, data stored and processed on the PCMCIA cards which are downloaded to the Space Station Computer (SSC) for downlink to MCC for analysis can then also be downloaded into the station server to transfer data onto the Artemis platform for Data Acquisition.

The ARED device enables astronauts to perform exercises to help maintain muscle strength, bone density, and condition strength and endurance. This device is connected to an SSC and enables collection of loads of up to 600 lbs for bar exercises and 250 lbs for cable exercises. The ARED device is capable of seven different configurations to accommodate for weighted exercises such as squats, dead lifts, bench lifts, heel raises, and arms pulls. Resistance of this device in microgravity is provided through piston movements within vacuum cylinders on this device to simulate deadlifts, as well as a

flywheel assembly which provides an inertial load function to simulate lifting free weights. The ARED Instrumentation Box (AIB) administers exercise prescriptions as well as stores and collects parameters such as bar loads, cable loads, and strokes in inches utilizing the ARED tablet personal computer (PC) [8]. This recorded data is then automatically downloaded to the station server where this data can also be transferred to the Artemis platform.

Activities and events that pertains to the countermeasure activities conducted can be collected from either mechanical data sources or manual user input. As such, data collected may include: any physiological data parameters required for monitoring and analytics, actual workload data that is based on the astronaut's countermeasure activity, and all training protocols and workloads that are pre-programmed or set onto the countermeasure equipment. In addition, the Data Collection component may also ingest data from NASA's BP devices and even MRI scans.

Table 5-1 – Countermeasure equipment and devices on the ISS for Data Collection

Data Type Sources (Device/ Equipment/ Machine)	***Data Parameters Collected***	***Known Data Ingestion Characteristics***	***Current Data Ingestion Method***
CEVIS (Insoles used in the Total Force-Foot Ground Interface and the Ambulatory Data Acquisition System, Portable Pulmonary Function System (PPFS) [6], [9], [10])	◆ Workload ◆ Cycling speed ◆ Heart rate ◆ Elapsed Time ◆ Exercise prescription details ◆ 14-sensor parameters ◆ Oxygen uptake ◆ ECG	128 Hz	Foot force data is temporarily recorded on flash cards (wearable computer) and later downlinked via satellite
Treadmill (Tensosystem with tension gauges attached to platform [11])	◆ Belt speed ◆ Restraint force ◆ Distance ◆ Elapsed time ◆ Heart rate ◆ Gyro speed ◆ Pre-programmed exercise protocol ◆ Fault messages ◆ Actual protocol performed ◆ Timestamp ◆ Electronics box temperature ◆ Motor box temperature ◆ Longitudinal axial load ◆ Vertical ground reaction forces	1—11 Hz 100–120 Hz 50—200 Hz	Data acquired on attached computer then downlinked to Earth for retrospective analysis
Astroskin [3]	◆ Heart Rate ◆ ECG ◆ Pulse oximetry ◆ Breathing rate ◆ Blood pressure ◆ Skin temperature ◆ 3-Axis Accelerometer	1 Hz	Data acquired offline then downloaded and processed retrospectively

(Table continued on next page)

Data Type Sources (Device/ Equipment/ Machine)	***Data Parameters Collected***	***Known Data Ingestion Characteristics***	***Current Data Ingestion Method***
Chest strap, wrist-worn receiver (contingent device) [2]	◆ Heart Rate ◆ Workload data files	200 Hz	Retrospective – Chest strap, data files are stored on ISS computers and downloaded to Earth-based ESA exercise specialist once per week
Pulse and Pneumocard [12], Cosmocard [4]	◆ ECG ◆ Heart Rate	1 Hz	Retrospective – Collected when astronauts are in resting state, fixed respiratory rate, continuous monitoring Data acquired offline then downloaded and processed retrospectively
NASA continuous BP device [13]	◆ Blood pressure	200 Hz 1000 Hz	Retrospective – Spontaneous Breathing and Paced Breathing in different positions (semisupine, supine, seated, standing) Data acquired offline in space then downlinked to Earth for retrospective analysis
MRI scans with Siemens 1 or 1.5T scanners [9]	◆ MRI images	Images	Pre-flight and Post-flight measurements Data acquired offline then processed retrospectively

The Data Collection component of this framework would also be capable of collecting data from devices that are detached from the space station structure [5]. Such devices for countermeasure and preventive measures include: the pneumo-vacuum suit, the Braslet occlusive cuffs, and wrist-worn receivers. For the proposed extended Artemis platform that instantiates the proposed countermeasure integrated framework to provide support for astronaut health in space and to enable effective intervention support, this Data Collection component is capable of utilizing the collection data by these and even other future data sources. Knowledge of the data ingestion structures on the space station for physiological, mechanical, and manual input data enables the data acquisition component to prepare data structures that are suitable for queuing, buffering, and transmission to Artemis onboard the ISS, and whenever communication is possible, transmission to Mission Control.

5.1.2 Data Acquisition – Space Station

The adaptive nature of this extended framework instantiated in the Artemis platform enables the capability of acquiring data in real-time and retrospectively from multiple devices and multiple individuals on a continual basis. Current data acquisition methods on the ISS, however, are retrospective. With the CEVIS and Treadmill, data is retrospectively transferred from the equipment via a PCMCIA card to the ISS data server and downlinked to MCC for analysis. With exercises conducted on the ARED, the medium of collection through the integrated PC enables data to be downloaded to the station's server [8]. The instantiation of this platform acquiring data onboard the ISS would depend on the devices chosen for continuous monitoring of desired parameters that is ideally

non-invasive and convenient for the astronauts. For example, the Cosmocard [4] and Astroskin [14], which have both been used on the ISS to acquire data first from the wearer and then data is retroactively transferred to the onboard station's computer.

With retrospective data loads, data files such as a .CSV or .TXT file can be considered ready and available for Data Buffering and Transmission and downstream processing. With real-time data ingestion, wearable devices or environmental sensors as an example, would require an API to acquire data values. Although a first-use example of this has not been known to be demonstrated on the ISS, terrestrial human performance experiments that have utilized physiological data acquisition devices such as the Zephyr BioModule in [15] have required a software licensing key and a local executable code as an API to enable multiple real-time data stream capture. As such, that methodology may also be utilized for real-time data acquisition purposes in this instantiation of this proposed framework. Enabled with appropriate program interfaces, physiological monitoring devices and countermeasure equipment as well any environmental monitoring system's connectivity to the Artemis platform can be performed seamlessly with the instantiation of the Artemis platform onboard the station's server.

5.1.3 Data Buffering and Transmission – Space Station

All countermeasure data relevant for an integrated autonomous monitoring platform onboard the ISS can be buffered and transmitted from the Data Acquisition component and into the Data Buffering and Transmission component of the Artemis platform. This component is designed to accommodate data movement within the bandwidth available on the ISS and with any transmission protocol required to transfer

data from the devices and sensors of the countermeasure equipment. Current data transfer from the astronauts are retrospective with astronauts uploading data from their countermeasure activities onto the station's server after their workout activities. Data can then be read from data flat files via Streams Computing on this server within the platform, provided that a queuing software is provided. For real-time data acquisition from the human performance study described in [15], RabbitMQ provided a reliable queueing mechanism that would be capable of streaming the specified frequencies outlined in Table 5-1. As such, data values generated directly from the devices and equipment used whilst countermeasure activities are conducted may be queued in real-time utilizing software such as RabbitMQ.

In addition, a network design suitable for queuing big data packets as they are generated, collected, and transmitted for the next component (Data Transformation) should be considered. Because the quality of data transmission depends on the space station's network availability, the optimal protocol to acquire data from the Data Acquisition component should be designed to seamlessly transmit classifications of data types from multiple devices. For example, if multiple wireless devices are employed and used by two astronauts at the same time, real-time data streaming can be enabled, and this component must accommodate the buffering and transmission of multiple wireless devices connectivity and two individual real-time data streams on the station's network.

5.1.4 Data Transformation – Space Station

To prepare the transmitted data from upstream components for downstream consumers, the Data Transformation component has been demonstrated to prepare raw

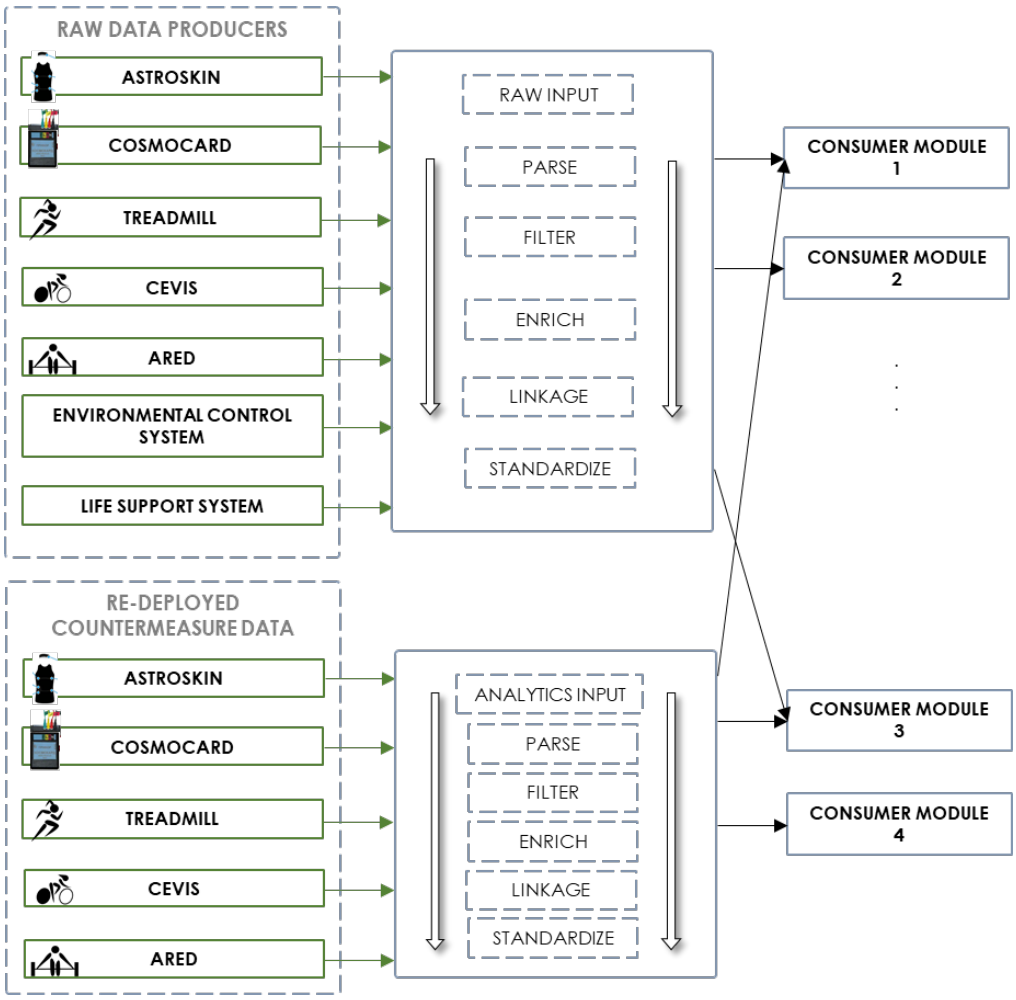

Figure 5-2 - Raw and Feedback Data Streaming Adaptive APIs to Prepare Data for Consumer Modules

data generated by multiple data producers in real-time [15], [16]. To include the integration of countermeasure data as feedback into the Artemis platform if instantiated on the ISS, a Feedback Streaming Adaptive API in addition to the Real-time Data Streaming Adaptive API would be required. Illustrated in Figure 5-2, the Data Transformation component as it would be instantiated on the ISS would employ the previously built-in Real-Time Streaming Adaptive API agent described in [17] as well as an additional API to accommodate for data that can be fed back into this framework. Similar to the work presented in [17], this API agent is capable of utilizing various aggregation processes to structure and format the countermeasure data in preparation for downstream

consumption. The adaptive nature of the API agent is capable of processing incoming data streams from multiple countermeasure devices in parallel and from multiple astronauts. Further in detail within the adaptive API, data producers can be structured and standardized depending on the existing parameters that are currently collected from the different devices. For example, for an astronaut who might wear the Astroskin while following an exercise protocol on the CEVIS on the ISS, data parameters such as HR, ECG, pulse oximetry, RR, BP, and skin temperature can be collected from the Astroskin [18]. The CEVIS also collects HR and ECG in addition to oxygen uptake, workload, exercise description details, cycling speed, elapsed time, and other parameters. There is evidently an overlap of HR and ECG parameters collected from both devices associated with this countermeasure activity as an example. The adaptive API agents within this component would then prepare data generated from the Astroskin and CEVIS through a process of mechanisms like parsing, filtering, enriching, and linkages to standardize these data parameters for downstream consumption modules such as Data Storage, Data Analytics, and systems supported through the Information Exploration component.

This process can then be enabled through the Streams computing application, which utilizes the application specific programming language known as Streams Processing Language (SPL) to construct algorithms as sets of operators interconnected as "graphs". Each operator takes one or more data stream as input and produces one or more output stream. The correlation of behaviours shown by the data from multiple physiological streams can then be analyzed to support multiple concurrent clinical management and countermeasures and intervention assessment needs.

5.1.5 Data Analytics – Space Station

The Data Analytics component on the ISS serves to perform analytics on countermeasure data and to generate analytics from data topics received from previously described components. Diagnostic and prognostic analytics modules that are designed for optimizing countermeasure activities based on an individual basis for each astronaut can then be applied to published countermeasure data topics of interest. Within this component, algorithms can be designed to employ various computing and data science techniques such as data mining, machine learning, and temporal pattern abstractions. As such, algorithms designed for specific health, wellness, and performance monitoring such as the Functional Health State algorithm and other future adaptive measure algorithms can then be enabled in their respective analytics modules as subscribed topics. This approach ultimately enables appropriate clinical and countermeasure decision support in real-time and/or retrospectively as necessary. This process is illustrated in Figure 5-3.

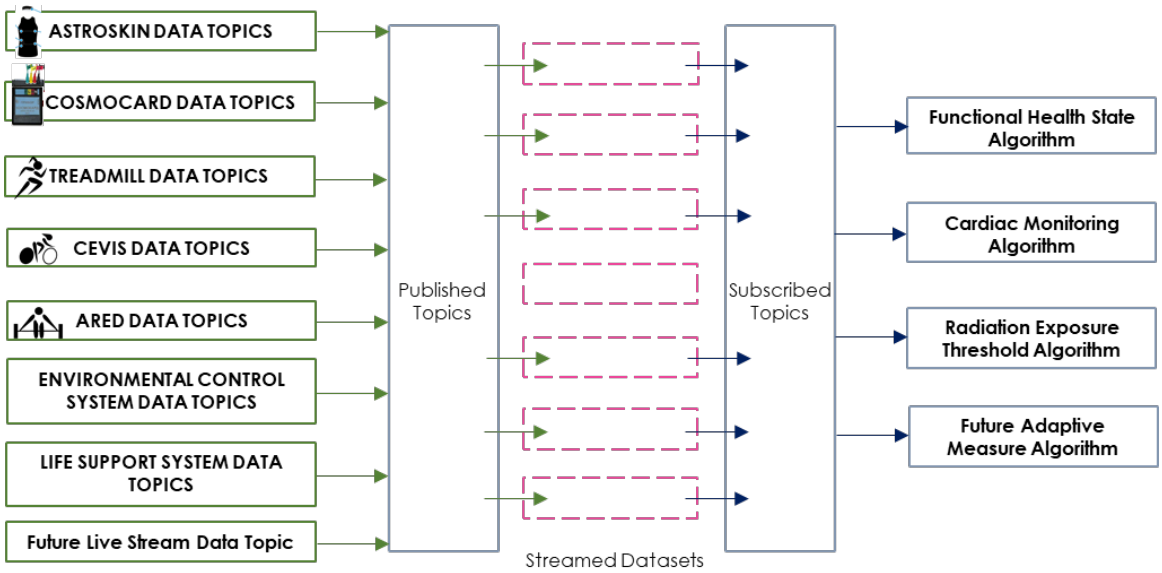

Figure 5-3 – Data Flow Diagram of Published Countermeasure Datasets as Topics After Processing within Adaptive APIs

The Data Analytics component of this framework also enables relevant published analytics that concern astronaut health on their respective missions into the three sub-components described in Chapter 4 (Real-time Monitoring and Alerting, Countermeasure Intervention Decision Support, and Visualization Reporting). In addition, derived analytics are then passed to downstream operations for storage, retrospective knowledge exploration at MCC, real-time monitoring and alerting mechanisms, and visualization reporting to present to astronauts onboard the ISS and to medical operators at MCC. Further to this, data analysis methods such as temporal data mining, multidimensional analysis, temporal abstraction, and spatiotemporal visualization techniques similar to work described in [19]–[22] can be employed within this component, thereby enabling capabilities for Real-Time Monitoring and Alerting and Clinical and Countermeasure Decision Support.

5.1.5.1 Real-Time Monitoring and Alerting

This sub-component onboard the ISS would be provisioned with a graphics interface mechanism that would enable astronauts to observe and review their current physiology and their current countermeasure activity conducted. Any data source that pertains to human physiology, countermeasure device/machine, and their training protocols that are collected from the Data Collection component may be selected for observation within this sub-component. In addition, provisioned with the appropriate tolerances programmed into the functional algorithms, an alerting mechanism should notify the astronaut if any thresholds are surpassed. This sub-component is designed to

be mirrored at MCC allowing for near-real-time monitoring and alerting functions to notify medical experts on ground if necessary.

5.1.5.2 Clinical and Countermeasure Decision Support

Any countermeasure activity being conducted that may require intervention is supported by this sub-component of the framework. Given an instantiation on the ISS and provisioned with an appropriate graphics interface, this sub-component would support the astronaut's countermeasure activity in real-time by displaying intuitive information to allow them to evaluate the effectiveness of their current countermeasure activity and potential impact to their health trajectory. This sub-component is also designed to be mirrored at MCC.

5.1.6 Information Exploration – Space Station

The Information Exploration component is integrated with the Data Analytics component, as it enables presentation of the countermeasure and performance activities data and derived analytics for real-time observation. Aboard the ISS, this information would be relevant for the astronaut active on the countermeasure equipment as their exercises are conducted. Should intervention be necessary, the countermeasure activity can be adjusted in real-time at the discretion and understanding of the astronaut.

5.1.6.1 Visualization Reporting and Intervention Assessment

This component is critical in presenting the relevant information to the astronaut to enable them to understand the appropriate intervention required immediately for their health and well-being. Graphic user interface and visualization to support real-time

reporting back to the astronauts in this component is subject to further research, however this component may leverage technologies such as that of the CoRAD system presented in [23] or visualization techniques such as a spatiotemporal data visualization as described in [24].

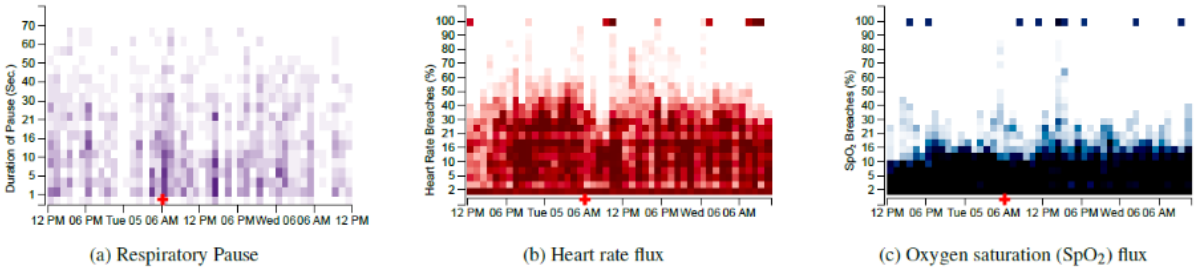

Figure 5-4 – Examples of a CoRAD (Cohort Relatively Aligned Dashboard) as described in [23]. These images are Temporal Intensity Maps of compact visualizations for rapid situational awareness of low-level behaviours in data streams

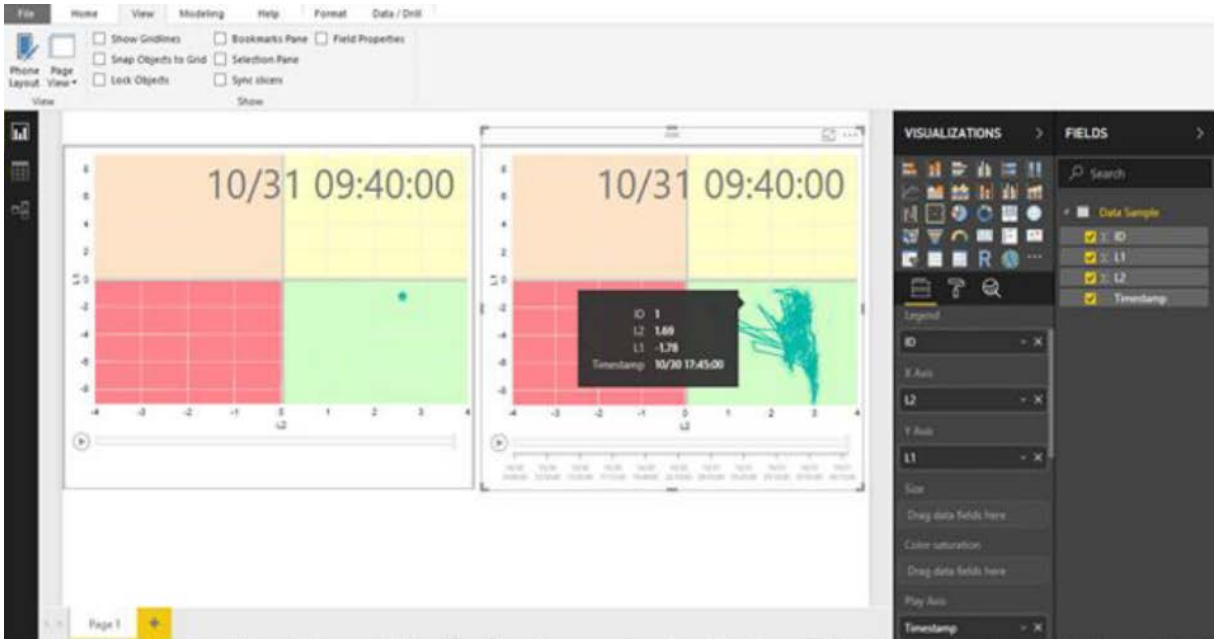

Figure 5-5 – A Spatio-temporal data visualization prototype described in [24] that utilized PowerBI to enable functional health state modelling

5.1.7 Data Storage – Space Station

The Data Storage component of this framework on the ISS should allow for persistent storage of all data generated from physiological, countermeasure device, equipment and machines, and manual input sources. This component should be designed such that as countermeasure data gets published by the Data Analytics component, data subjected to transformation processes as well as analytics derived may be stored in a structured data warehouse. This approach would enable further in-database analytics as additional knowledge can be extracted from the Information Exploration component described in the previous section. The design of data persistency and data storage for retroactive knowledge discovery onboard the space station would depend on the computing resources available. Compute power and space allocation may be limited on the ISS, therefore it is noteworthy to design this component to communicate with MCC on Earth when downlink/uplink transmission is available. Data stored within this component may include their entire electronic health record as well, including information from past missions, as this is of critical use to enhance prognostic and clinical algorithms for individual astronauts, especially for those who have flown on multiple missions into space. Currently, the Data Storage component of the Artemis platform is provisioned by IBM DB2 [25].

5.2 Methodology to Remote Monitoring from Mission Control

This section describes the remote monitoring portion of the proposed extended framework. This purpose of this part of the framework is to enable continuous health

monitoring and ultimately, enable remote assistance for countermeasure and intervention decision support systems.

5.2.1 Data Transformation – Mission Control

The Data Transformation component at MCC enables the preparation of the data from the Data Buffering and Transmission component on the space station for consumption of the downstream components that are mirrored from the space station. The Adaptive Streaming APIs agent that are employed in this component on the station are also employed at MCC. The same aggregation processes, functional mechanisms, and structuring approaches for downstream modules are performed on the data that is downlinked from space.

The Artemis platform would also be instanced on a server at MCC as it is instanced on the ISS, however, it can be assumed that the local server at MCC or an Earth-based cloud hosted location would have a higher storage capacity than the ISS. Controlled access between the servers for real-time data feeds would be required to enable this component for effective downstream analytics to be deployed on the data acquired.

5.2.2 Data Analytics – Mission Control

The Data Analytics component at Mission Control serves the same function as its' mirror component onboard the station with additional capacity to enable additional analytics to be performed. Analytics are performed on the countermeasure data published by the API agent and the analytics are generated for storage, observation, knowledge exploration, monitoring and alerting, and visualization reporting. What

astronauts can observe in this component on the space station, medical operators would also be able to observe in near-real-time and to perform higher levels of support based on data-informed retroactive knowledge discovery. Such capability have great potential to be provisioned with the next generation proprietary hybrid data relay, Commstar-1 as described in [26].

Medical surgeons, specialists, exercise experts, and developers can also assess the efficacy of new algorithms before they are deployed to the ISS. Algorithms employed in the twin component in space would operate in the same manner within this component at MCC. The algorithms that require the same data from the Data Transformation component for processing, would subscribe to the respective data stream topics published by the adaptive API agent. The analytics derived can then be published into the same three sub-components for Real-time Monitoring and Alerting, Countermeasure Intervention Decision Support, and Visualization Reporting, while analytics can also be stored persistently in the Data Storage component for retroactive knowledge discovery.

5.2.3 Information Exploration – Mission Control

The Information Exploration component at MCC again employs the same three sub-components described in the Data Analytics component at Mission Control. Presentation of the countermeasure and performance activities data and derived analytics are enabled for real-time observation. Earth-bound resources can be leveraged here to observe such analytics and countermeasure activities in real-time, should it be necessary, training protocols can be updated and interventions can be advised to the astronaut virtually.

5.2.4 Data Storage – Mission Control

The Data Storage component at MCC also allows persistent storage of the transformed raw data as it gets generated and of the derived analytics from the Data Analytics component, as well as of the data from the API agent. Leveraging the extra Earth-bound resources, algorithms that require updates can be extracted from the Information Exploration component and can be redeployed back onto the ISS through to the station's Buffering and Transmission component. The compute power and space allocation capacities of the Data Storage component on Earth would be more scalable in nature to accommodate the data and analytics growth. Retroactive knowledge discovery performed will be stored in this component. Should algorithmic advancements be made, they could be uplinked to the space station to be made available back to the astronauts onboard.

Due to the highly structured data produced and transformed by multiple integrated sources proposed within this framework, a proven application should be employed for appropriate data storage to enable real-time and retrospective data analytics and information exploration in this component. Prior deployments of Artemis have used IBM DB2 in this component in terrestrial applications [27]. In addition, new knowledge, re-engineered algorithms, and optimized thresholds from Earth-based specialists can be uploaded with version control to the space station as needed for enhanced analytics.

5.3 Discussion

A new individual assessment method has been designed that utilizes the Artemis platform as a tool to theoretically show individual health assessment and intervention due to exercise in real-time and retrospectively. To demonstrate the capability of the proposed framework, the foundational theory has been presented in this chapter to support individual health trajectories of astronauts through the continuum of time as countermeasure activities are performed. In the case for astronauts arriving at the ISS and living long-term in microgravity, changes to their physiology is inevitable. To mitigate this and to counter drastic impacts over time, physical exercises should be conducted as consistently as possible in countermeasure regimens. Astronauts exercise rigorously in space, with the cycle ergometer (CEVIS) as one of the countermeasure equipment, as part of their effort to change their physiological trajectory to maintain their strength and optimal performance. For the purpose of this thesis, environmental conditions are described as two categories: normal (Earth-based) and extreme (space). Physiological stress levels are categorized by low, medium, and high. Physiological states are categorized under three states: steady (homeostasis), adaptive, and adaptive-steady (new homeostatic state where physiology has adapted).

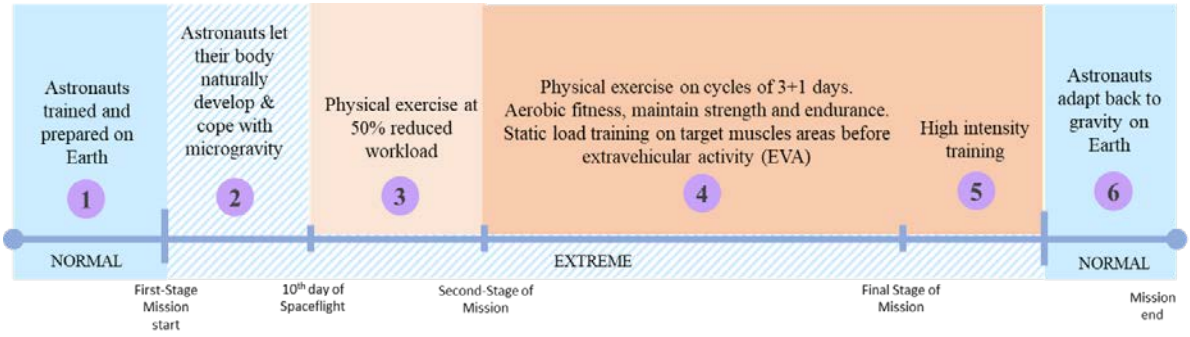

Figure 5-6 – Stress for Astronauts on Earth and the ISS as Normal and Extreme Environments respectively

Table 5-2 – Table of Physiological Stress States for Astronauts in Normal/Extreme Environments

Environment	***Physiological Stress Level***	***Physiological State***
1. Normal	Low	Steady
2. Extreme	High	Adaptive
3. Extreme	Medium-Low	Adaptive
4. Normal	Medium	Adaptive-Steady

These classifications are used to demonstrate the parallel physiological states impacted by countermeasure activities for astronauts and for the firefighter population discussed in the second case study in the next chapter.

For astronauts, exercising on the cycle ergometer is important for enabling aerobic exercises to help improve their long-term health trajectories in space and in preparation for Earth's re-entry. As such, stress cases for astronauts can be categorized into four phases tabled in Table 5-2.

The second phase differs from the third phase largely based on acute adaptation to microgravity in the first stage of the mission to consider the time given for astronauts to adapt to the new environment. Physical exercises, which begin with a reduced workload of 50% from the 5th to even 10th day of spaceflight, are part of the routine countermeasures to help astronaut's physiological adaptation to microgravity [28].

Countermeasure training is integral in every mission, whether it is a firefighting mission or a mission in space. To advance current countermeasure systems with information that would enrich researchers and individual professional trainees and astronauts, the potential of real-time intervention is necessary. The extension of this framework instantiated in the Artemis platform would enable an alternate category of

knowledge discovery with respect to the effectiveness of countermeasure exercises in preparation for spaceflight and in the microgravity environment. The case study described in this chapter demonstrates an extended health assessment architecture that incorporates countermeasure activities to enable countermeasure and intervention decision support for astronauts in space. This methodology adopts an individualized approach and as such demonstrates the capability of this proposed work for real-time continuous health monitoring applications

5.4 Conclusion

This chapter has presented an instantiation of the proposed extended framework with the integration of countermeasure data from several existing equipment on the ISS. This case study demonstrates the potential utilization of the Artemis platform on the ISS to support:

1) Individualized health monitoring and assessments, particularly during exercise for astronauts on the ISS,
2) Utilizing countermeasure data as data feedback within the platform, and
3) Countermeasure intervention support to the individual astronaut as necessary aboard the ISS.

REFERENCES

[1] C. McGregor, "A framework for online health analytics for advanced prognostics and health management of astronauts," *Aerosp. Conf. 2015 IEEE*, pp. 1–7, 2015, doi: 10.1109/AERO.2015.7119301.

[2] N. Petersen *et al.*, "Exercise in space: The European Space Agency approach to in-flight exercise countermeasures for long-duration missions on ISS," *Extrem. Physiol. Med.*, vol. 5, no. 1, pp. 1–13, 2016, doi: 10.1186/s13728-016-0050-4.

[3] Hexoskin, "Astroskin Product Specifications Physiological Data Signals Astroskin Product Specifications Physical Specifications," pp. 2018–2019, 2018.

[4] O. Orlov, C. McGregor, R. Baevsky, A. Chernikova, A. Prysyazhnyuk, and V. Rusanov, "Perspective Use of the Technologies for Big Data Analysis in Manned Space Flights on the International Space Station," *68th Int. Astronaut. Congr. (IAC 2017)*, 2017.

[5] J. Yeung and C. McGregor, "Countermeasure Data Integration within Autonomous Space Medicine: An Extension to Artemis in Space," in *IEEE Life Sciences Conference*, 2018, pp. 251–254.

[6] P. Truong, "Cycle Ergometer with Vibration Isolation and Stabilization (CEVIS) System (CEVIS)," 2021. https://www.nasa.gov/mission_pages/station/research/experiments/explorer/Investigation.html?#id=821 (accessed Nov. 16, 2021).

[7] M. Murray, "Treadmill with Vibration Isolation and Stabilization System (TVIS)," 2021. https://www.nasa.gov/mission_pages/station/research/experiments/explorer/Investigation.html?#id=949 (accessed Nov. 16, 2021).

[8] C. W. Burkhart, "Advanced Resistive Exercise Device (ARED)," 2021. https://www.nasa.gov/mission_pages/station/research/experiments/explorer/Investigation.html?#id=973 (accessed Nov. 16, 2021).

[9] R. Gopalakrishnan *et al.*, "Muscle volume, strength, endurance, and exercise loads during 6-month missions in space," *Aviat. Sp. Environ. Med.*, vol. 81, no. 2, pp. 91–102, 2010, doi: 10.3357/ASEM.2583.2010.

[10] P. R. Cavanagh, K. O. Genc, R. Gopalakrishnan, M. M. Kuklis, C. C. Maender, and A. J. Rice, "Foot forces during typical days on the international space station," *J. Biomech.*, vol. 43, no. 11, pp. 2182–2188, 2010, doi: 10.1016/j.jbiomech.2010.03.044.

[11] E. V. Fomina, A. O. Savinkina, and E. N. Yarmanova, "Ground reaction force values in cosmonauts during locomotor exercises on board the International Space Station," *Hum. Physiol.*, vol. 43, no. 5, pp. 542–548, 2017, doi: 10.1134/S0362119717050048.

[12] R. M. Baevskii and A. G. Chernikova, "Assessment of adaptation risk in an individual prenosological monitoring system," *Neurosci. Behav. Physiol.*, vol. 46, no. 4, pp. 437–445, 2016, doi: 10.1007/s11055-016-0255-4.

[13] R. L. Hughson *et al.*, "Cardiovascular regulation during long-duration spaceflights to the International Space Station," *J. Appl. Physiol.*, vol. 112, no. 5, pp. 719–727, 2012, doi: 10.1152/japplphysiol.01196.2011.

[14] "Hexoskin Lands $2.4M Space Medicine Contract," *Carre Technologies inc (Hexoskin)*, 2016. https://www.hexoskin.com/blogs/news/tagged/astroskin.

[15] C. Inibhunu, J. Yeung, A. Gates, B. Chicoine, and C. McGregor, "A Decoupled Data Pipeline and its Reliability Assessment: Case Study in Extreme Climatic Humans Studies," *IEEE Big Data Conf. BPOD*, pp. 3075–3084, 2021.

[16] C. McGregor *et al.*, "Health Analytics as a Service with Artemis Cloud: Service Availability," *Proc. Annu. Int. Conf. IEEE Eng. Med. Biol. Soc. EMBS*, vol. 2020-July, pp. 5644–5648, 2020, doi: 10.1109/EMBC44109.2020.9176507.

[17] C. Inibhunu, R. Jalali, I. Doyle, A. Gates, J. Madill, and C. McGregor, "Adaptive API for Real-Time Streaming Analytics as a Service," *41st Int. Eng. Med. Biol. Conf.*, pp. 3472–3477, 2019.

[18] A. P. Specifications, "Astroskin Product Specifications Physiological Data Signals Astroskin Product Specifications Physical Specifications," pp. 2018–2019, 2018.

[19] C. Inibhunu and C. McGregor, “Machine Learning Model for Temporal Pattern Recognition,” *2016 IEEE EMBS Int. Student Conf.*, pp. 1–4, 2016, doi: 10.1109/EMBSISC.2016.7508614.

[20] C. Catley, K. Smith, C. McGregor, and M. Tracy, “Extending CRISP-DM to incorporate temporal data mining of multidimensional medical data streams: A neonatal intensive care unit case study,” *Proc. - IEEE Symp. Comput. Med. Syst.*, pp. 9–13, 2009, doi: 10.1109/CBMS.2009.5255394.

[21] A. Thommandram, J. M. Eklund, C. McGregor, J. E. Pugh, and A. G. James, “A Rule-Based Temporal Analysis Method for Online Health Analytics and Its Application for Real-Time Detection of Neonatal Spells,” *Big Data (BigData Congr. 2014 IEEE Int. Congr.*, pp. 470–477, 2014, doi: 10.1109/BigData.Congress.2014.74.

[22] A. Prysyazhnyuk and C. McGregor, “Spatio-temporal visualisation of big data analytics during spaceflight,” *Proc. Int. Astronaut. Congr. IAC*, vol. 2018-Octob, no. October, pp. 1–5, 2018.

[23] R. Kamaleswaran, “A dynamic visual analytics framework for complex temporal environments,” no. June, 2016.

[24] A. Prysyazhnyuk, C. Mcgregor, and C. Author, “Spatio-Temporal Visualization of Big Data Analytics During Spaceflight,” no. October, pp. 1–5, 2018.

[25] J. Yeung and C. McGregor, “Analyzing countermeasure effectiveness utilizing big data analytics for space medicine decision support: A case study,” *Proc. Int. Astronaut. Congr. IAC*, no. October, pp. 21–25, 2019.

[26] C. Mcgregor, “A Platform for Real-Time Space Health Analytics as a Service Utilizing Space Data Relays,” 2021.

[27] C. McGregor, “Big Data in Critical Care Using Artemis,” *Signal Process. Mach. Learn. Biomed. Big Data*, pp. 519–531, 2018, doi: 10.1201/9781351061223-26.

[28] I. B. Kozlovskaya, A. I. Grigoriev, and V. I. Stepantzov, “Countermeasure of the negative effects of weightlessness on physical systems in long-term space flights,” *Acta Astronaut.*, vol. 36, no. 8–12, pp. 661–668, 1995, doi: 10.1016/0094-5765(95)00156-5.

Chapter 6. Case Study for Monitoring Countermeasure Activity of Firefighters in a Simulated Extreme Environment (Cold Stress Training Scenario)

This chapter details the application of the proposed framework that enables a methodology to correlate physiological data with countermeasure exercises in real-time to allow for assessment of different physiological responses in different time segments for firefighters training in a Cold Stress Training Scenario. This scenario serves as an analog for astronauts who exercise in space, particularly for countermeasures performed on the CEVIS on the ISS. The architecture applied in this scenario demonstrates the ability of this framework as a method to assess short-term and long-term adaptation and physiological impacts for individual firefighters in the extreme cold environment.

6.1 Methodology to Monitor Firefighters in a Simulated Extreme Environment

To facilitate the demonstration of the extended framework proposed supporting individualized physiological assessments of the impact of training activities, this sub-section describes the workshop scenario and the experiment that was conducted. Firefighter students from the Durham College Pre-Service Firefighter, Education, and Training (PFET) program were recruited for this study. This study was open to all students completing in the Environmental Stress Workshop as part of their program curriculum. The Environmental Stress Workshop consists of four firefighting training scenarios that took place in climate-controlled chambers at Ontario Tech University's ACE Facility in Oshawa, Canada. Firefighter students would rotate through the four scenarios (1. Heat

Stress Primary Search and Rescue, 2. Cold Stress Roof Ventilation and SCBA (Self-Contained Breathing Apparatus) Operation, and 3. Dynamic CPR Training in a simulated ambulance structure, and 4) Command and Communication Station with supporting activities). The Cold Stress Training Scenario is considered in this case study as part of demonstrating the proposed extension of the Artemis platform. This study was approved under the ethics approval board from Durham College (#156-1718) and Ontario Tech University (#14783).

Data was collected from 90 (19 female) firefighter students who underwent training in the Cold Stress Roof Ventilation and SCBA Operation scenario. The purpose of firefighter students completing the scenario is to simulate the experience of ventilating a roof in Canadian winters. The session started with the firefighter students exercising on a stationary bike for five minutes to simulate the cardiac load of climbing onto the roof with their SCBA gear on their backs in cold weather conditions. To simulate the precipitation, firefighters were sprayed with mist that froze as it landed on their protective gear and their equipment. They then climbed onto a roof prop with an axe and were required to cut a hole for ventilation. After climbing back down from the roof, firefighters were required to tie a specific knot in a rope as part of their fine motor skills exercise activity, followed by changing their air cylinders. These activities are likely to occur for firefighters in the field whilst still on a roof, however due to the space limitation on the roof props, firefighters were required to climb down first before performing the fine motor skills activities. Finally, to simulate the descent of a real roof in the winter, the students were

Figure 6-1 – Firefighters training on stationary bikes at ACE to simulate cardiovascular stress from climbing up and down a ladder onto a roof (Photo credit: Durham College)

required to exercise on the bike again for five minutes with their gear and equipment, while the artificial precipitation was sprayed on them before ending the scenario session.

An instantiation of the proposed extended Artemis platform is described in the context of this proposed framework, by correlating the respective activities actioned with respective windows of physiological data. This section describes a methodology that demonstrates the proposed extended framework through an instantiation of the Athena platform in this Cold Stress Training Scenario for Firefighter training. The components of this framework, which is built upon the Athena platform, in this case study will describe how individual assessments integrated with activity events performed by each individual firefighter can presented [1], [2]. More specifically, assessments of the simulated cardiovascular exercise on stationary bikes is classified as a countermeasure activity thereby presenting a terrestrial technology analogue that may also be utilized on the ISS for astronaut countermeasure exercises performed on the CEVIS. Figure 6-2 describes the instantiation of the extended framework applied in this study. The proposed framework is instanced within the Athena platform which extends the Data Collection, Data

Acquisition, and Data Analytics components. In addition, the feedback mechanism proposed was instantiated in this case study with derived HRV data calculated from a previous study.

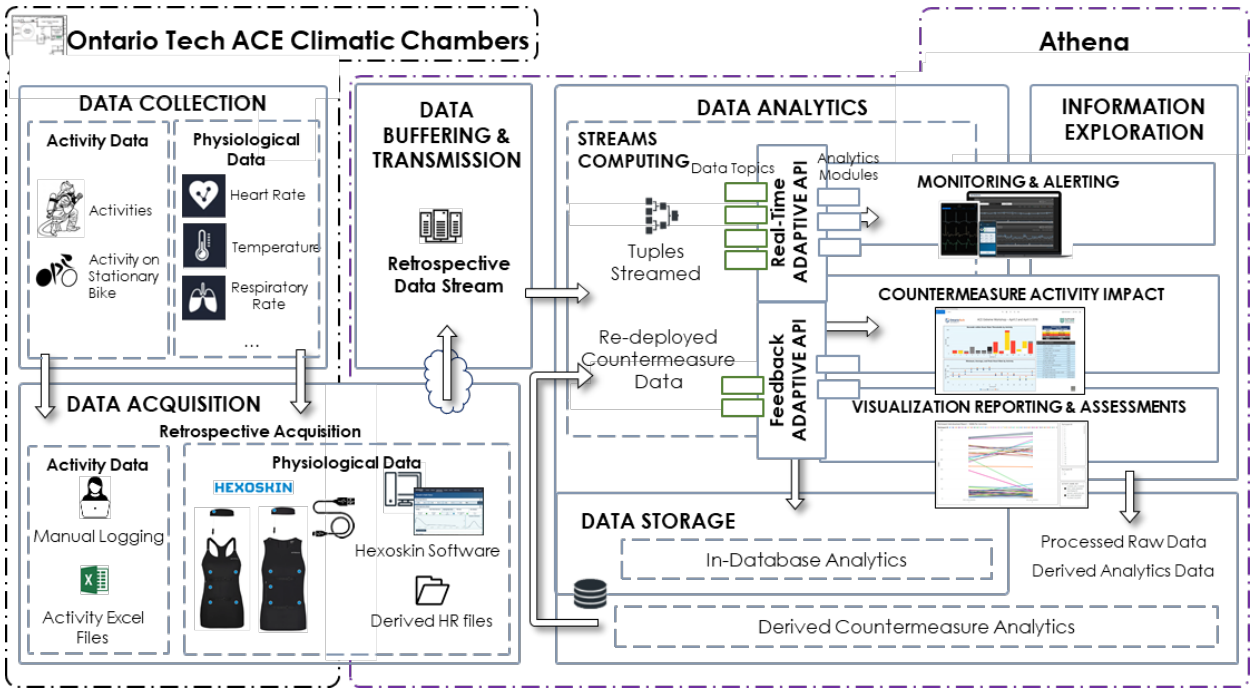

Figure 6-2 – Big Data Analytics Framework for Activity-Based Impact Health Monitoring and Assessment for Firefighters

6.1.1 Data Collection – Cold Stress Firefighter Training

The Data Collection component in this case study supports the collection of physiological and activity data from individual participants in the Cold Stress Training Scenario. During the experiment, each firefighter student wore a biometric compression garment known as Hexoskin (Carre Technologies Inc). The Hexoskin is a terrestrial companion product of the Astroskin/Bio-Monitor also made by Carre Technologies Inc that is mentioned in Chapter 5 [3]. HR data, ECG values, RR interval data, breathing rate, and other metrics were captured from the range of sensors and a data logger built within the garment. Their resting HR data five minutes before the training scenario was also collected.

Each training task conducted by each student were collected via manual documentation onto Microsoft Excel spreadsheets by a team of research assistants. The respective start and end time that each participant would take to complete each task, including start and pause times of some of the tasks within overall scenarios, were documented onto event logging sheets. Of particular interest in this case study, is the collection of HR data from the participants during both five-minute bike rides for countermeasure impact assessment via downstream components detailed below in this framework. A team of research assistants manually recorded the times that each participant completed the Cold Stress scenario along with information on the start and stop times of tasks within the overall scenario on event logging sheets. A summary of the data collected during the workshop is listed in Table 6-1.

In related work outside the scope of this thesis, the collection and acquisition of activity data has since been upgraded to real-time capture through an online form [4].

Table 6-1 – Data type sources collected from the firefighters of the Cold Stress Training Scenario workshop

Data Type Source	***Data Parameters***	***Data Ingestion Characteristics***	***Data Ingestion Structure***
Physiological (Hexoskin)	HR ECG Breathing Rate 3-axis accelerometer	1 Hz, 64-256 Hz	Continuous Big Data Streaming Retrospective Data acquired from files generated by the Hexoskin cloud-based software
Activity Protocol	Annotation of activities conducted including start and stop times ◆ First 5 minutes ◆ First 5-minute bike ride ◆ Air cylinder change ◆ Mount & ventilate roof ◆ Tie knot in rope ◆ Second 5-minute bike ride ◆ First to second bike ride (whole session)		Discontinuous Retrospective - Manual input in Excel spreadsheets
Environmental	Temperature	N/A	Retrospective Discontinuous

6.1.2 Data Acquisition – Cold Stress Firefighter Training

Physiological data is acquired retrospectively from the Hexoskin garment by connecting a USB cable from the data logger to a computer. When the training workshop was complete, participants' Hexoskin data was uploaded from the data logger to the Hexoskin cloud-based dashboard. From the ECG data, the detection of R peaks within the QRS complex is performed by the Hexoskin cloud-based software and valid peak-to-peak intervals, known as N-N intervals were acquired via a data file produced. Derived heart

rate values were also generated into data files for each participant for the complete duration of wearing the garment. Activity data was retrospectively stored into Excel spreadsheets by a team of research assistants.

6.1.3 Data Buffering and Transmission – Cold Stress Firefighter Training

Data transmission was enabled from the Hexoskin garments' built-in data logger when the data was uploaded via wired USB connection into the cloud-based Hexoskin software on a laptop. Data buffering was not required as data movement was acquired from files generated from Hexoskin's cloud-based software and was retrospectively processed by the Athena platform. For the purpose of this demonstration of this extended framework instantiated within the Athena platform, retrospective data buffering and transmission of physiological and activity data of this case study is considered retrospective data streaming.

6.1.4 Data Transformation – Cold Stress Firefighter Training

Built upon prior work described in [5] that prepared heart rate values using Athena and the Hexoskin cloud-based software, this component observed the ingestion of SDNN values that were calculated in that work. The data parameters outlined in Figure 6-3 including SDNN, mean HR, minimum and maximum HR values per activity were standardized in this component for downstream analytics consumption.

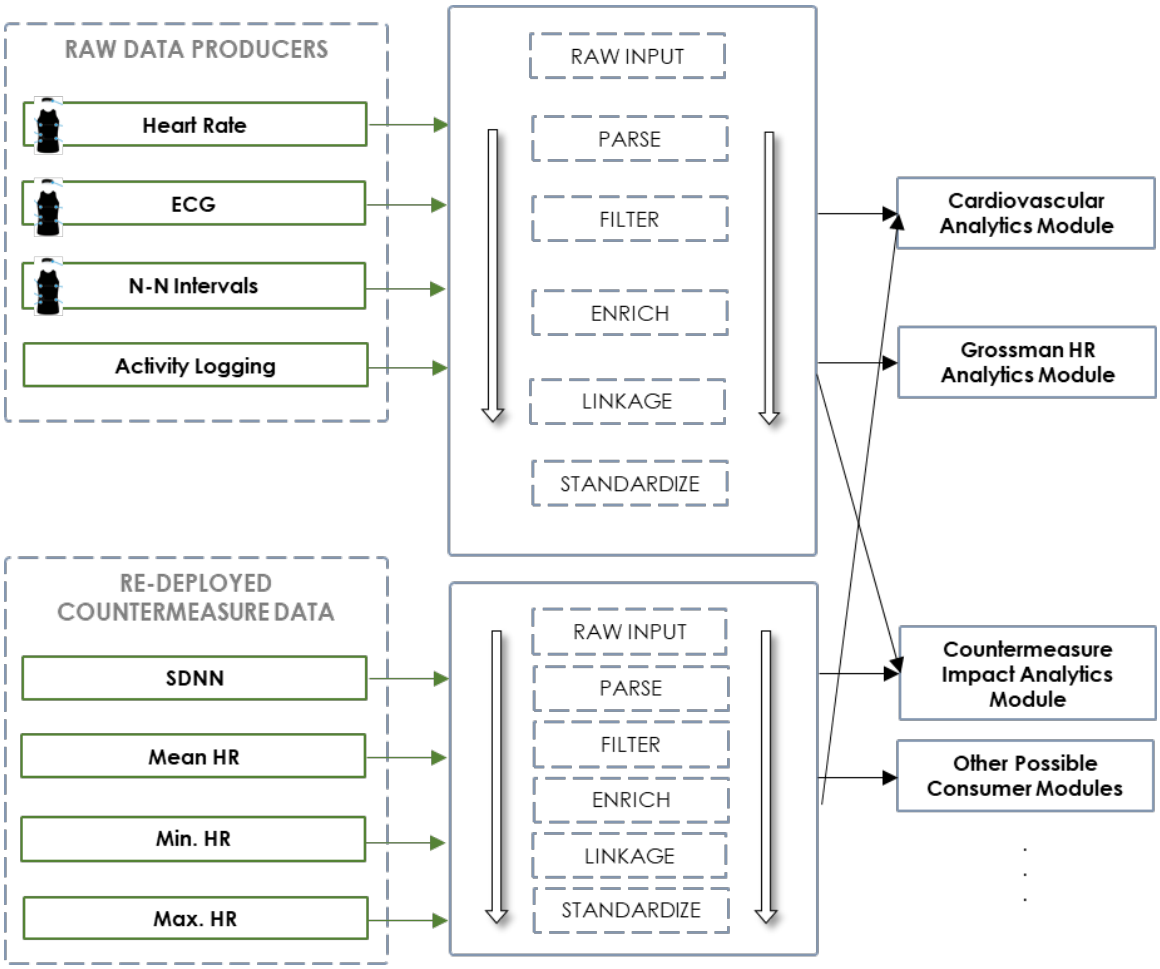

Figure 6-3 – Adaptive Data Streaming APIs for Raw Data Producers and Re-Deployed Countermeasure Data Producers in the Firefighter Cold Stress Training Scenario

6.1.5 Data Analytics – Cold Stress Firefighter Training

The Data Analytics component in this case study utilized SDNN values derived from heart rate data in previous work described in [5]. From the Hexoskin software, the R peaks within the QRS complex from ECG data and non-artifact R-R interval (N-N interval) data values were generated. The HRV data was transformed by calculating SDNN values as derived values. Built upon that work, this case study observed the SDNN values per activity conducted by each firefighter in the simulated training workshop. As such, data

stream of physiological and activity data from data files were retrospectively pulled into this component of Athena for countermeasure analytics which correlated SDNN values to the first and second stationary bike ride. Minimum, average, and maximum HR values were also calculated and compared under the Grossman Scale Classification [5]. An instance of the adaptive API within Athena for this case study is depicted in Figure 6-4. This adaptive API enabled SDNN values to be calculated from previous work [6]. HR values were considered as re-deployed countermeasure data as their individual heart rates could be observed within each activity.

To demonstrate the capability of this extended framework within this case study as an individualized analogue for monitoring astronauts exercising on the CEVIS in space, pre-calculated SDNN values conducted as part of the experiment Pre-Fire Firefighting Training Workshop in 2019 was correlated with bike rides conducted per participant during the Cold Stress training workshop. This mechanism enables a method for firefighting instructors to assess the response of firefighting students through the

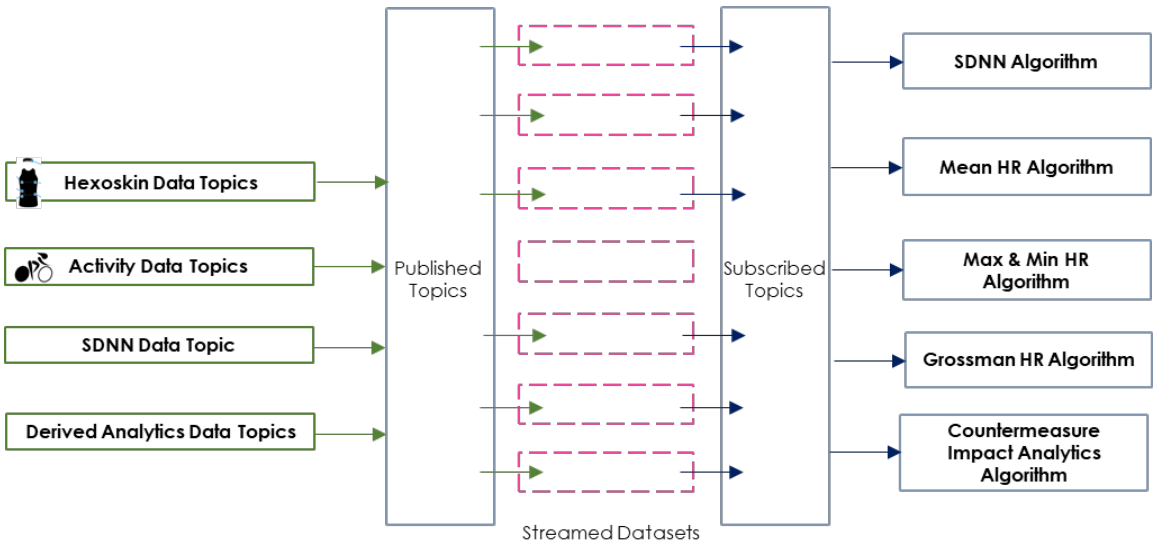

Figure 6-4 – Published data topics as streamed datasets for Analytic Modules to subscribe to topics as needed

duration of the scenario. In particular, individual participant's SDNN data are stratified with the bike rides as countermeasure tasks enabling the ability to observe the direct impact of activities on their health trajectory. SDNN, minimum, maximum and mean HR values were also calculated using Streams and was stratified with operational tasks included in this workshop for a complete scope of individual resilience and health assessments for the duration of the Cold Stress scenario, however discussion of other data topics is beyond the scope of this thesis. Visualization of this correlation are described in the Information Exploration section below.

6.1.5.1 Real-Time Monitoring and Alerting

Physiological data monitoring was conducted throughout the duration of the operational scenario. To meet ethics requirements, raw physiological data, particularly HR, BP, and body temperature were observed on the Hexoskin software dashboard to ensure thresholds were not exceeded for any participant during the workshop.

6.1.5.2 Clinical and Countermeasure Decision Support

Impact assessments based on the countermeasure bike rides on the stationary bikes were processed and observed retrospectively. Utilizing individual SDNN data values per activity, the SDNN on the individual participant between the first and second five-minute countermeasure activity that is the stationary bike ride simulating the cardiovascular stress load can be observed in PowerBI. Figure 6-5 and Figure 6-6

respectively depicts the correlation of each male and female participant's SDNN values based on their first bike ride and their second after the ventilating the roof.

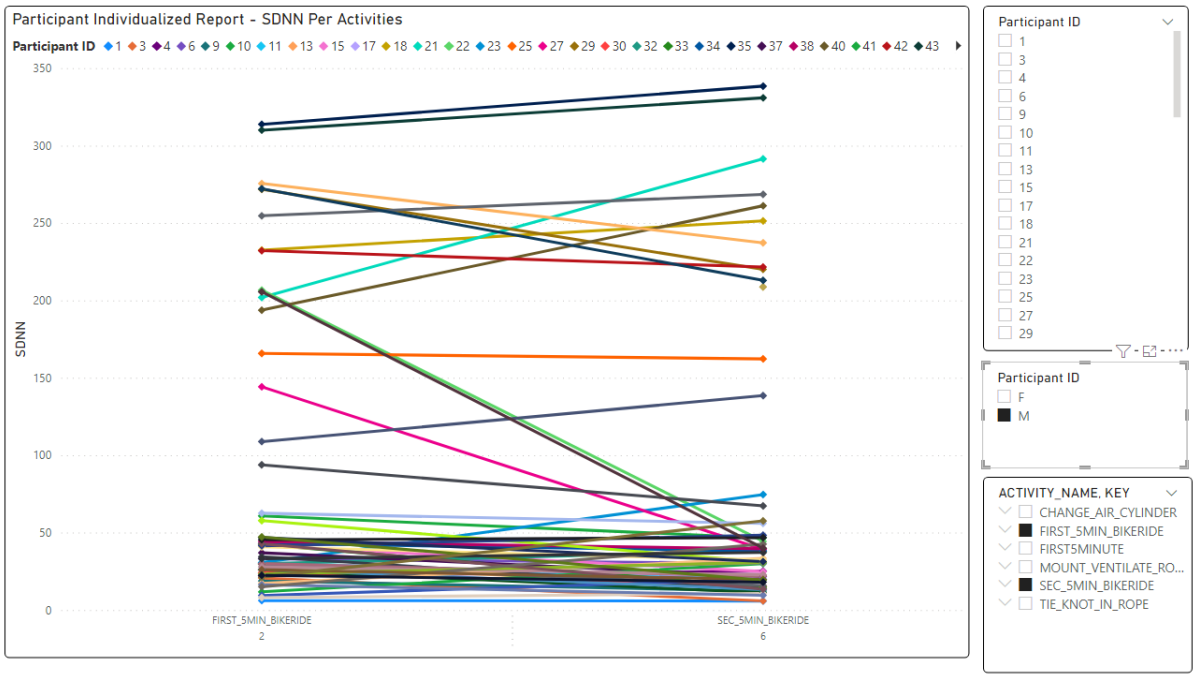

Figure 6-5 – SDNN Correlation based on stationary bike ride as countermeasure activity for 71 male participants

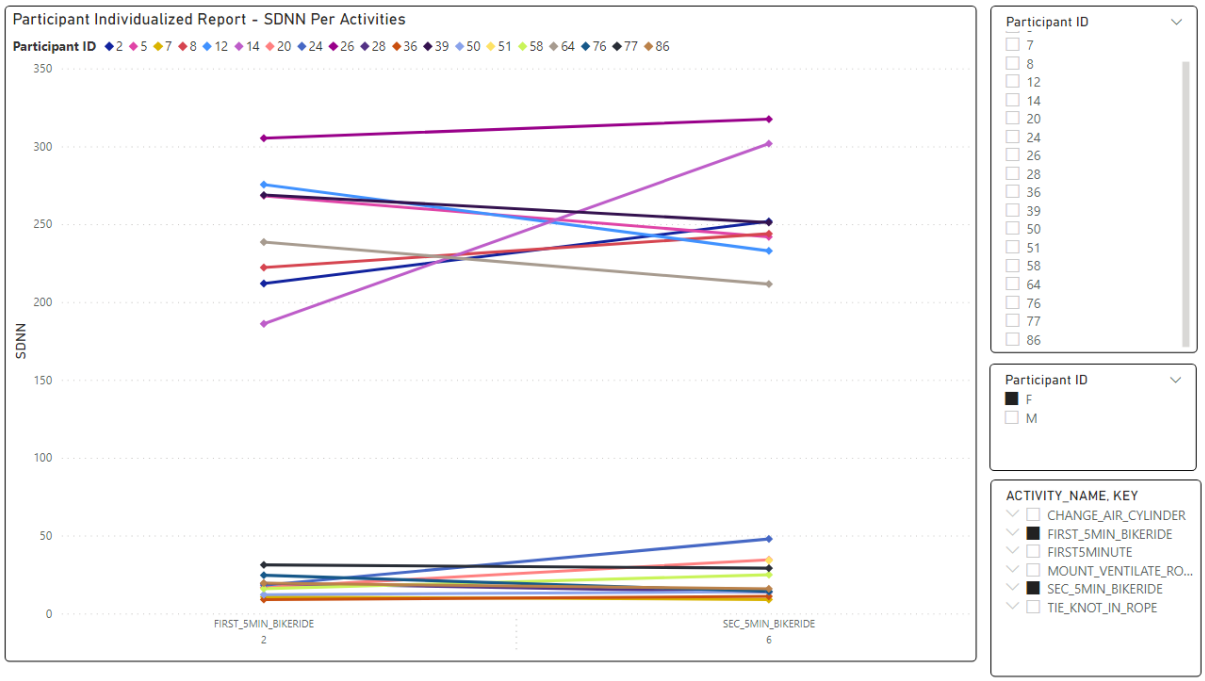

Figure 6-6 – SDNN Correlation based on stationary bike ride as countermeasure activity for 19 female participants

6.1.6 Information Exploration – Cold Stress Firefighter Training

The assessment of each firefighter for the entire Cold Stress Training session (from their first five-minute exercise on the bike to the second five-minute exercise) based on their SDNN trajectory are observed for male and female participants, as depicted in Figure 6-5 and Figure 6-6 respectively. The impact of countermeasures on the participant throughout the training workshop can be observed through their individual SDNN trajectory. As mentioned in the Clinical and Countermeasure Decision Support section, the bike ride activities based on their SDNN values were generated as graphs information exploration in this component. Furthermore, the correlation of SDNN values with the trajectory of workshop activities conducted is provisioned within this component. Figure 6-7 depicts the entire SDNN trajectory for both male and female participants. This capability provisions firefighting instructors with information based on the impact of the activity measures for each firefighter.

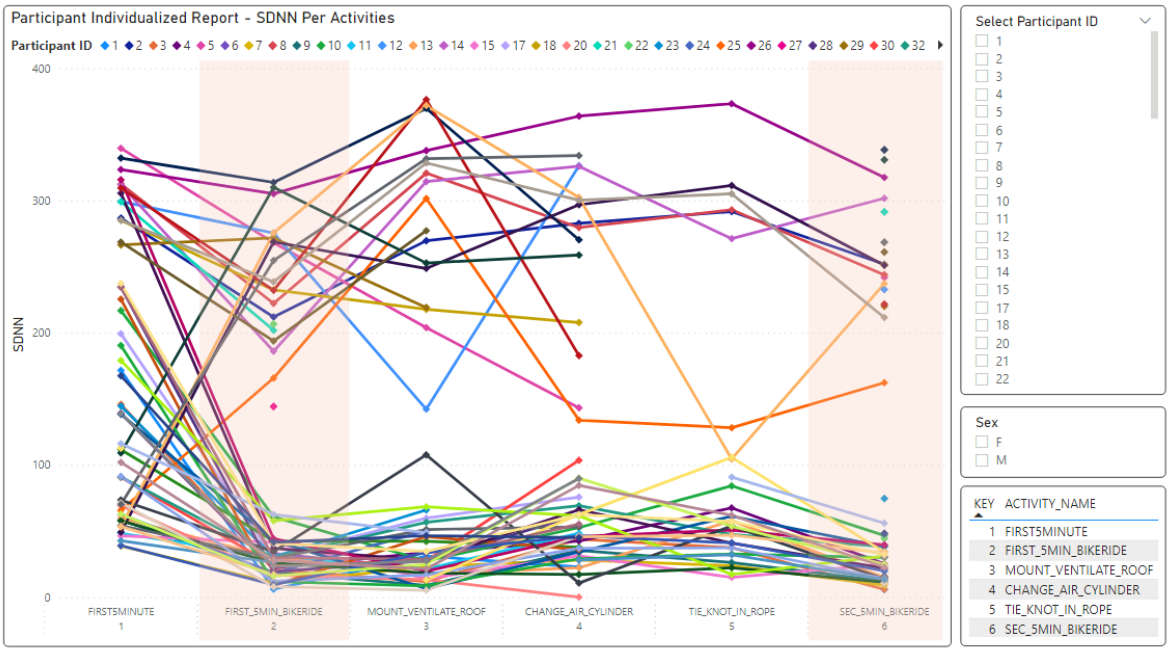

Figure 6-7 – Activity-based impact assessment based on SDNN values per cold stress training activity for all participants

6.1.6.1 Visualization Reporting and Intervention Assessment

The Information Exploration component of this framework provides retrospective monitoring and individualized intervention assessments based on the cycle ergometer activity conducted per participant. Visualization is enabled by a visualization tool from Microsoft known as PowerBI, which allows for retrospective analysis and monitoring of the firefighters in the simulated cold stress training scenario. From Figure 6-7, each individual participant's SDNN trajectory throughout the workshop session can be selected for observation in the top-right panel. Figure 6-5 and Figure 6-6 allows observation of individual SDNN values from the first bike ride to the second bike. The illustrated rise or drop in SDNN value for male and female firefighters during the bike rides to stimulate a roof ascend and descend provides evidence of intervention to the individual firefighter's physiology as a result of conducting the countermeasure activity.

6.1.7 Data Storage – Cold Stress Firefighter Training

SDNN, minimum, maximum, mean HR values, as well as a table structure providing Grossman Scale Classification based on HR is stored in table structure in this Data Storage component. These tables are populated based on analytics derived from the Data Analytics component in this study. The instantiation of the extended framework uses the Athena platform's existing architecture which utilizes IBM DB2 for storage and persistency. The next section will discuss in further detail the capability of this extended framework and its functionality to be used toward astronaut health monitoring and countermeasure impact assessment for intervention decision support.

6.2 Discussion

For firefighters, the nature of the extreme environment remains Earth-bound. Analogous to astronauts performing countermeasure activities on the CEVIS in space (Figure 3-2), firefighters in this case study performing the activity of cycling on the cycle ergometers is classified as a countermeasure activity. Their exercise activity segments on the cycle ergometer aims to activate their cardiovascular system and elevate their HR to simulate the cardiac exertion of climbing a ladder. For the firefighter participants in this study, the physiological windows of data collected and the activities conducted per participant were correlated with the respective SDNN values that were calculated in a previous study described in [5]. Building upon that work, the methodology described in this chapter created the visual report depicted in Figure 6-7 which depicts their individual SDNN values that correlated with each activity event performed.

Research has demonstrated that a reduction of the SDNN metric in a preceding cardiac load event signifies a physiological stress load on the person. Since the SDNN metric has demonstrated itself as a useful parameter as an indicator for parasympathetic and sympathetic responses of the body, the comparison of two SDNN values from one countermeasure activity to the second one was presented. Correlated with the countermeasure activities that were extracted out, Figure 6-5 and Figure 6-6 depicts the change in SDNN value from the first countermeasure segment to the second for male and female participants respectively. Overall, 41% of the male (29 out of 71) participants and 39% of the female (7 out of 19) participants in this study showed a reduction of their SDNN values from the first countermeasure to the second.

Table 6-2 – Table of Physiological Stress States for Firefighters in Normal/Extreme Environments

Environment	***Physiological Stress Level***	***Physiological State***
Normal	Low	Steady
Extreme	High	Adaptive
Extreme	Medium	Adaptive-Steady

The individual change in SDNN values demonstrated the physiological stress impact of the countermeasure bike rides. From the visual reports depicting each participants' health assessment per activity in Figure 6-7, their SDNN values reflect the physiological state that they are in respectively. Their health trajectory with respect to the continuum of activities performed in this simulation environment enables a depiction of their adaptation abilities. Upon completing the training session, their physiological states at the point of their second bike ride can be shown to be at an adaptive-steady state.

Throughout the entire scenario, firefighter trainees whose HRV reduced below 50 had physiological stress levels that were considerably high in the extreme environment. Given that this training workshop was their first exposure to a scenario in a simulated extreme environment, these firefighters were still learning and adapting. Once they complete their mission activities, they are returned to a normal environment and their resilience can be developed based on more experience and continued exposure to training.

The results of this case study have demonstrated the process to observe the individual health assessments for firefighters conducting countermeasure activities in an extreme cold stress training scenario. As such, this work has also proposed an analogous

method to demonstrate the applicability of this proposed framework to enable countermeasure data within the feedback mechanism.

Due to the secondary use of retrospective data collected in this study, noteworthy limitations including age, weight, and fitness levels of participants were not considered. In addition, while countermeasure activity data was not synchronized live with physiological data during primary data collection, this functionality was simulated subsequent to primary data collection.

6.3 Conclusion

This chapter presented a case study utilizing the Athena platform which instantiated the extended framework presented in Chapter 4. This case study presented derived analytics from a human performance experiment that consisted of firefighters in a Cold Stress Training workshop as part of the Durham College Pre-Service Firefighter, Education, and Training (PFET) program at the ACE Climatic Chambers at Ontario Tech University. Within the Cold Stress Training scenario, stationary bikes were utilized by the firefighters to simulate the cardiovascular load of climbing up a roof for smoke ventilation in a real-life scenario. For the purpose of demonstrating the extended framework within this case study, the bike ride activity is classified as a countermeasure activity, which is a similar task that astronauts perform on the ISS as part of their countermeasure activities. The potential of this framework has demonstrated its technological capability in providing visualizations for the individualized impact and assessment of activities based on SDNN

values for each participant. Further details of clinical impact based on SDNN values during the firefighters' countermeasure activities is beyond the scope of this thesis, but will be discussed in a forthcoming publication.

REFERENCES

[1] C. McGregor, B. Bonnis, B. Stanfield, and M. Stanfield, "A method for real-time stimulation and response monitoring using big data and its application to tactical training," *Proc. - IEEE Symp. Comput. Med. Syst.*, vol. 2015-July, pp. 169–170, 2015, doi: 10.1109/CBMS.2015.44.

[2] C. McGregor and B. Bonnis, "Big data analytics for resilience assessment and development in tactical training serious games," *Proc. - IEEE Symp. Comput. Med. Syst.*, vol. 2016-Augus, pp. 158–162, 2016, doi: 10.1109/CBMS.2016.64.

[3] "Hexoskin Lands $2.4M Space Medicine Contract," *Carre Technologies inc (Hexoskin)*, 2016. https://www.hexoskin.com/blogs/news/tagged/astroskin.

[4] C. Inibhunu, J. Yeung, A. Gates, B. Chicoine, and C. McGregor, "A Decoupled Data Pipeline and its Reliability Assessment: Case Study in Extreme Climatic Humans Studies," 2021.

[5] C. McGregor, F. M. Williams-Bell, and B. Bonnis, "Extreme Climate Pre-Deployment Acclimation Resilience Assessment Using Climate Chambers and Big Data," *10th Annu. Mil. Veteran Heal. Res. Forum*, p. 87, 2019, doi: 10.3233/PRM-170430.

[6] C. McGregor, "The Use of Physiological Data for the Assessment of Firefighter Resilience," *J. Mil. Veteran, Fam. Heal.*, vol. 38, no. August, pp. 253–262, 2020.

Chapter 7. Conclusion

7.1 Summary of Thesis

Advancements in science and technology continue to demonstrate its capacities and address challenges of medical autonomy for individuals in extreme, isolated, and/or remote environments. The paradigms of big data and streaming technologies in health and medical monitoring has motivated information science frameworks to provide valuable insight from data to users. As such, there is a need for effective approaches in enhancing information systems and computing platforms for continuous health monitoring. The provision of wearable technologies in particular has expanded the capabilities of medical monitoring to data-informed frameworks that can also leverage AI and ML for knowledge discovery and information exploration. Furthermore, information system frameworks instantiated into big data computing platforms are capable of deriving big data analytics. Outlining the most advanced big data analytics frameworks, architectures, and platforms to date, the literature review presented in Chapter 2 also outlined current challenges and gaps in such frameworks. More specifically:

1) An effective medical health information system that aligns human users with technologies within a healthcare organization is crucial.

2) There is a need for information system frameworks to describe these systems.

3) Retrospective and real-time analytics (re)deployment is a big data challenge.

4) Current limitations exist in a holistic framework that is inclusive of countermeasure data to provide individualized countermeasure and intervention health assessments.

5) Big data analytics frameworks and architectures to date lack a feedback mechanism for continuous health monitoring to enable long-term health trajectory impact assessments based on countermeasures and intervention activities, particularly in the context of a SMDSS

In the context of space medicine, spaceflight presents adverse physiological risks that are diverse from one individual astronaut to another. While individualized exercise regimens deployed under a system of countermeasures on the ISS in LEO currently help astronauts maintain their physiology for optimal performance in conducting multiple science experiments and maintenance tasks throughout each day of their mission including EVAs, adaptation to microgravity while in isolation and confinement remains a complex challenge to the dynamic human body. Particularly for succeeding space programs planned for exploration-class missions that would extend to the Lunar surface and beyond [1], other technological challenges such as deep space communication and the need for autonomous medical care arise. As such, the ability to ensure the maintenance of each crew member's health and safety is integral to the crew's survival and return back to Earth. The literature review in Chapter 3 presented the contextual foundation for the extended framework presented in this thesis. More specifically:

1) The unknown physiological impacts of long duration spaceflight give rise to the need for autonomous medical care capabilities and advancements in today's countermeasure systems.

2) Network communication limitations are expected for longer duration spaceflight to the lunar surface and to Mars, which presents the need for an autonomous continuous health monitoring solution that may require a degree of modularity and edge computing paradigm for reliable autonomous medical care

3) Current physiological data collected from astronauts in space are discontinuous and analyzed retrospectively, which hinders the ability for real-time corrective actions.

4) Existing SMDS frameworks lack countermeasure data integration.

5) Existing SMDS frameworks lack a continuous feedback mechanism for astronauts to autonomously assess effectivity of their countermeasure activities.

6) Existing platforms that support SMDS systems lack a feedback mechanism for derived countermeasure analytics to be (re)deployed.

7) The Artemis platform proposed for SMDS exists independent to the countermeasure exercise programs that are designed to address adaption challenges.

In an effort to address the challenges identified in the Chapter 2 and Chapter 3 literature reviews, this thesis extended an existing framework that has been instantiated

in an existing big data analytics platform known as Artemis. This extended framework and its components have been detailed in Chapter 4, while Chapter 5 instantiated this framework in a case study that outlined its potential utilization in space and specifically within the context of the current environment on the ISS. In summary:

- The Data Collection component has been extended to include data generated from countermeasure devices and equipment sources such as the onboard T2 treadmill, CEVIS, and the ARED. Data ingestion structures were also considered for continuous and discontinuous data generation from all possible data sources identified.

- The Data Acquisition component has been extended to enable data acquisition from different devices and equipment utilized for countermeasure intervention activities. The design of this component enables a modular approach for real-time and retrospective acquisition from devices such as the Cosmocard, the Astroskin, and a PCMCIA card.

- The Data Transformation component has been extended to process (re)deployed countermeasure data from derived countermeasure analytics from the Data Storage component. A feedback adaptive API was created as part of this component to support processing raw data as well as (re)deployed countermeasure data for downstream consumer modules

- The Data Analytics component has been extended to include countermeasure algorithms such as the Functional Health State algorithm to consume derived HRV

data. The feedback adaptive API was also created to support countermeasure data analytics within this component. Countermeasure data topics along with data topics from other sources such as the onboard Environmental Control System and Life Support System as well as physiological data topics were considered as potential streamed datasets that may be subscribed to by countermeasure algorithms.

Terrestrial analogue environments provide a simulation environment for astronauts-in-training to ensure astronauts are prepared with adaptative measures and resilience training to the conditions of spaceflight and living conditions in isolation and microgravity on the ISS. Similar to the physical environment that set the simulation environment in terrestrial analogue missions, this thesis demonstrated the extended framework through an analogous method in the case study presented in Chapter 6 with firefighters conducting a countermeasure activity in a simulated extreme cold stress training workshop. Similar to astronauts who conduct aerobic exercises on the CEVIS, firefighters conducted aerobic exercises on stationary bikes in an extreme cold environment to simulate the cardiac load of climbing up a ladder and onto the roof of a house in cold winter conditions. They then perform the mission task of ventilating the roof prop with an axe before simulating the cardiac load of climbing back down the ladder with a second aerobic exercises on stationary bikes. The proposed framework instantiated in this case study demonstrated the capacity of the extended Artemis platform to ingest feedback data as derived HR data from 90 (19 female) firefighter students. The clinical significance from this case study supported existing research

findings that HR reduction signifies physiological stress loads. These stress loads to the firefighter students cycling on the ergometer in the extreme cold workshop is also analogous of the physiological stress loads upon an astronaut exercising in microgravity. The instantiation of the proposed framework in the application of space medicine and firefighter training reveals that countermeasure analytics can enable visual assessments which can be utilized by the individual firefighter to help them advance their training measures in future repeated workshops. As such, the application and instantiation of this extended framework utilizing this analogous methodology demonstrate great potential for individualized health monitoring and assessments and informed countermeasure and intervention decision support for astronauts in space.

7.2 Summary of Research Contributions

This thesis contributes knowledge to the following research areas as described:

Computer Science:

- Design components to extend an existing framework instantiated with the Artemis platform to integrate countermeasure and intervention activities. More specifically:
    - the Data Collection component incorporated countermeasure data sources

- the Data Acquisition component ingested countermeasure data from modular sources
- the Data Transformation component incorporated countermeasure data and derived analytics
- the Data Analytics component incorporated a feedback mechanism to provide countermeasure and intervention decision support

- Demonstrated the potential of real-time online health analytics through a retrospective file-based method with processed physiological adaption data to enable individual countermeasure and intervention assessments

Health Informatics:

- Created a holistic framework that supports individualized health assessments based on countermeasure and intervention activities
- Demonstrated the potential of this extended framework to support real-time online health analytics for individuals in a simulated extreme environment

Space Medicine:

- Created an integrated countermeasure and intervention decision support framework to provide a holistic individual health monitoring approach
- Demonstrated this integrated framework within an existing space medicine decision support platform

7.3 Limitations and Future Work

Human spaceflight and running human experiments in space are high demand and high cost endeavours. As such, the demonstration of the extended framework of this thesis stayed within the terrestrial scope. However, the theoretical foundation presented within the extended Artemis platform may continue to be built upon based on the following perspectives known to date.

Communication and Network System:

In the discussion for Data Buffering and Transmission within the Artemis platform, it was noted that should this platform be integrated for autonomous monitoring on a spacecraft, the design architecture would account for the bandwidth availability at that time to enable big data streaming from multiple sources. In addition, transmission protocols from each sensor and device needs to be specified in order for seamless data movement. For information and communication relay to ground control, this framework has the potential to be extended to support Spaceflight Health Analytics as a Service (SHAaaS) utilizing SDRaaS as proposed in the recent publication by McGregor [2].

System Integration Testing:

The case studies presented in this thesis did not present any work relating to an integrated end-to-end system testing. Further to this, data collection from the firefighters in the cold stress training workshop scenario was retrospective. Built upon the architecture presented in [3], a thesis that extended that architecture to include service reliability metrics within the healthcare context have the potential to extend this

framework to incorporate design reliability and availability for big data streaming within a SMDS system that integrates countermeasure activities. Paradigms of edge and cloud computing that enable data source decoupling, similar to the work presented in in [4] can also build a reliable data pipeline within this first-of-its-kind feedback framework and demonstrate robustness of this extended platform.

Due to space limitations that hindered actual testing in space, the case study presented in Chapter 5 lacked an integrated end-to-end testing of countermeasure equipment described: T2 treadmill, CEVIS, and ARED. Furthermore, there are other devices used in-flight also such as the Siemens 1.5T scanner, which generates MRI images that are classified as unstructured data. The ingestion of unstructured data in a big data analytics platform has yet to be explored.

Analogue Experiments with Human Participants:

Future work that pertain the work presented in this thesis may include an ethically approved end-to-end integrated test that is terrestrial-based. There are multiple methods possible to demonstrate an integrated test with human participants. Physiological data that are collected retrospectively may be acquired in batch files format into a stimulated Artemis platform where a data pipeline within the platform can demonstrate the capabilities and robustness of this framework to support autonomous medical care and countermeasure intervention decision support for astronauts in space. A presentation methodology to present visuals back to the human user may also be incorporated as a

component within this framework in another ethically approved human performance experiment run in a simulated extreme environment.

Due to lasting pandemic limitations in 2020, human performance experiments were halted for an unspecified time and thus, face-to-face interactions were hindered. As such, only data from previous experiments were available and utilized in this thesis. This also resulted in limitations to the described analogous study as age, weight, and fitness levels were not considered.

ISS Mission 'Space Health':

While the case studies presented in this thesis remained terrestrial bound, McGregor's recently awarded CSA funded Space Health research study may propel the extended framework presented in this thesis to new heights. The Astroskin Bio-Monitor as described in Chapter 5, will be deployed on the ISS to enable data collection of two 24-hour cycle segments. Data collected within three continuous 48-hour windows will be used to evaluate resilience and assess impacts of exercise, activities, and sleep and mental health states on the cardiovascular system for individual astronauts. These will be compared to 48-hour sessions collected pre-flight and postflight. There is great potential to instantiate this extended framework within this Space Health mission to demonstrate feasibility of the Artemis platform for near real-time health and wellness monitoring of human spaceflight.

7.4 Concluding Statements

Deep space exploration and human space travel is an immense engineering and medical feat. As humankind continue on extreme endeavours of exploration, so does the need to ensure the health and safety of these humans who take on the performance of such journeys. Their performance is integral. With the vast amount of data that continue to be generated from sensors and monitors, technological advances in utilizing AI and ML to leverage big data analytics have great potential to assist medical experts and exercise specialists to help humans maintain and even better performance. Within the context of space medicine, the potential of big data analytics can be leveraged within the Integrated Medical Support (IMedS) system currently onboard the ISS, however, there currently lacks a framework that integrates countermeasure activities enabled as feedback. In addition, knowledge of countermeasure effects on physiology in long duration spaceflight still remains largely unknown.

This thesis has presented an online big data health analytics framework that incorporates countermeasures and intervention activities to advance the support of Space Medicine Decision Support (SMDS) systems. The proposed framework is designed to help address the challenges of big data streaming, current lack of analytics feedback to human users, and more specifically, changing physiology for humans in extreme environments. This framework has been instantiated in the existing Artemis platform, which this thesis extends to encapsulate existing countermeasure activities on the International Space Station (ISS). This extended platform has been further demonstrated in the second case study through the use of HR data from firefighters conducting exercise

on a stationary ergometer in a cold stress training workshop by an analogous method. Through this, clinical significance supported previous research findings that a reduction of HR values from one countermeasure activity to the second same activity signified a physiological stress load. The scope of this research solution proposed has demonstrated great potential for utilizing big data analytics for continuous health monitoring. This framework has great potential to support applications in autonomous and remote healthcare such as human space travel, space medicine, and monitoring humans in low-resource settings.