Energy and Exergy Analyses of Biomass Cogeneration Systems

by

Yung C. Lien

A Thesis Submitted in Partial Fulfillment of the Requirements for the Degree of

Master of Applied Science in Mechanical Engineering

in

The Faculty of Engineering and Applied Science

Program

University of Ontario Institute of Technology

CERTIFICATE OF APPROVAL

CERTIFICATE OF APPROVAL

Submitted by **Yung-Cheng Lien**

In partial fulfillment of the requirements for the degree of

Master of Applied Science in **Mechanical Engineering**

Date of Defence: **August 20, 2012**

Thesis title: Energy and Exergy Analyses of Biomass Cogeneration Systems

Examining Committee

Ramiro Liscano
Chair of Examining Committee

Hossam Gaber
External Examiner

Bale V. Reddy
Research Supervisor

Yuping He
Examining Committee Member

As research supervisor for the above student, I certify that I have read and approved changes required by the final examiners and recommend the thesis for acceptance:

Bale V. Reddy
Research Supervisor

ABSTRACT

Biomass cogeneration systems can generate power and process heat simultaneously from a single energy resource efficiently. In this thesis, three biomass cogeneration systems are examined. Parametric analysis of back pressure steam turbine cogeneration system, condensing steam turbine cogeneration system and double back pressure steam turbine cogeneration system is conducted. Energy and exergy analyses are performed for three biomass based cogeneration configurations. The parametric analysis demonstrates the effects of varying operating conditions (temperature: $340\,^{o}C$ to $520\,^{o}C$ and pressure: 21bar to 81bar). A higher steam inlet temperature and pressure to the turbine yields better energy and exergy efficiencies and performance. Steam inlet conditions to the turbines and process heater requirements influence the power output and cogeneration system efficiencies. Greenhouse gases reduction is achieved by cooperating cogeneration systems with biomass to reduce CO_2 emissions and global warming potential in the power industrial sectors.

Keywords: Biomass, Cogeneration, Steam Turbines, Energy Efficiency, Exergy Efficiency

ACKNOWLEDGMENTS

This thesis paper would not have been possible without the support of my supervisor, Dr. Bale V. Reddy for his extraordinary guidance and support throughout my entire process. I would like to thank the examining committee members, Dr. Bale V Reddy, Dr. Hossam Gaber , Dr. Yuping He and Chair of Examining Committee, Dr. Ramiro Liscano for their time and suggestions. I would also take this opportunity to express my great appreciations to the Faculty of Engineering and Applied Science at UOIT since they have provided all the assistance and support to me.

TABLE OF CONTENT

LIST OF FIGURES

Chapter 1

Chapter 3

Chapter 4

LIST OF TABLES

Chapter 1

Chapter 4

NOMENCLATURE

Symbols

HHV	Lower Heating Value .kJ/kg
LHV	Higher Heating Value .kJ/kg
m	Mass flow rate, kg/s
h	Specific enthalpy ,kJ/kg
s	Specific entropy, kJ/kg K
W	Work produces, kW
v	Specific volume m^3/kg
P	Pressure, bar
Q	Heat transfers, kW
C_P	Specific heat at constant pressure of fluid, kJ/kg K
α	Heat loss coefficient
gz	Potential energy
u	Internal energy

Subscripts

$\dot{Q}_{boiler}$	Heat transfers in boiler, kW
$\dot{Q}_{process}$	Heat transfers in Process heater, kW
$\dot{E}$ x (ex)	Flow exergy, kW
$\dot{E}$ x_{in}	Flow exergy inlet, kW
$\dot{E}$ x_{out}	Flow exergy outlet, kW
$\dot{E}$ $x_{destruction}$	Exergy destruction, kW
$\dot{E}$ x_{procee}	Exergy transfer in process heater, kW

$\dot{E}\,x_{fuel\text{-}chemical}$	Chemical exergy of biomass, kJ/kg
h_{fg}	Enthalpy of vaporization, kJ/kg
h_{Actual}	Actual enthalpy, kJ/kg
S_{Actual}	Actual entropy, kJ/kg
$\dot{m}_{fuel}$	Mass flow rate of fuel supply, kg/s
$\dot{m}_{coldwater}$	Mass flow rate of cold water, kg/s
η_{exergy}	Exergy efficiency %
η_{energy}	Energy efficiency %
$\eta_{combustion}$	Combustion efficiency %
ϕ_{dry}	Ratio of chemical exergy in the dry solid fuel
S_{gen}	Entropy generation, kJ/kg K
T_0	Temperature in Kelvin
T	Temperature $^{\circ}C$
$LHV_{ricehusk}$	Lower heating value in rice husk, kJ/kg
$LHV_{bagasse}$	Lower heating value in bagasse, kJ/kg
LHV_{coal}	Lower heating value in coal, kJ/kg
HHV_{DAF}	Higher heating value of dry and ash free coal kJ/kg
S_{DAF}	Absolute entropy of coal, kJ/kg K
$\bar{S}$	Standard Entropy, kJ/kmol
$\bar{e}$	Standard Exergy, MJ/kmol

Acronyms

GHG	Green House Gases
CHP	Combined Heat and Power
LCA	Life Cycle Assessment

EES	Engineering Equations Solver
WHRB	Waste Heat Recovery Boiler
HRSG	Heat Recovery Steam Generator
BPST	Back Pressure Steam Turbines
CEST	Condensing Steam Turbines
HPR	Heat to Power Ratio
PHR	Power to Heat Ratio
ICE	Internal Combustion Engines
NHP	Net Heat to Process
FCP	Fuel Chargeable to Power
DAF	Dry and Ash Free
NCV	Net Calorific Value
H (h)	Hydrogen
C (c)	Carbon
N (n)	Nitrogen
O (o)	Oxygen

CHAPTER 1: INTRODUCTION

1.1 Introduction

Essentially, the energy can be well-defined from three axioms, at any given rate of population total energy consumption will grow at greater rate, desire for abundant energy on demand and a clean and safe environment, and finally the future of humanity will continue to follow a one-way and irreversible path [1]. The three axioms describe how fast the demand of energy is going to rise in the near future by increasing populations and the urgent problems of finishing current energy resources rapidly in the near future. In addition, the problem is not only limited to the energy crisis, but also the emissions. The report of energy, environment and sustainable , represents the matter of global demand for energy service is expected to increase by as much as an order of magnitude by 2050, while primary energy demands are expected to increase by 1.5±3 times. Simultaneously, concern will likely increase regarding energy related environmental concerns such as acid precipitation, stratospheric ozone depletion, and global climate change development [39].

In the power industrial sectors, there several types of power generation currently employ with firing coal, natural gas, and fossil fuel as supplying fuels. The problems emerge from power generation, not only the energy resources depletion, but also produce the contaminations from the thermal wastes. In general, any kind of activity involves combustion process, which is most likely to produce carbon dioxide, ozone and other unburned gasses and thus contributes to the greenhouse gases (GHG). According to the record of the total greenhouse gas emissions from power generation in 2007, 73% originated from coal-fired power generation, 19% from gas fired power generation, and

8% from oil-fired power generation (IEA 2009).The way of producing electricity and process heat becomes one of the essential sectors to initiate environmental pollutions from the current energy resources. In the current energy resources usage, such as fossil fuel, coal, and natural gas are primary energy resources for power generation.

Figure 1.1 graphically shows the different sharing of energy resources in producing power, and the coal, oil, and natural gas are most utilized as supplying fuels. However, the bio-fuel and waste still have not attracted attention to utilize in the power industrial sectors in the past few years.

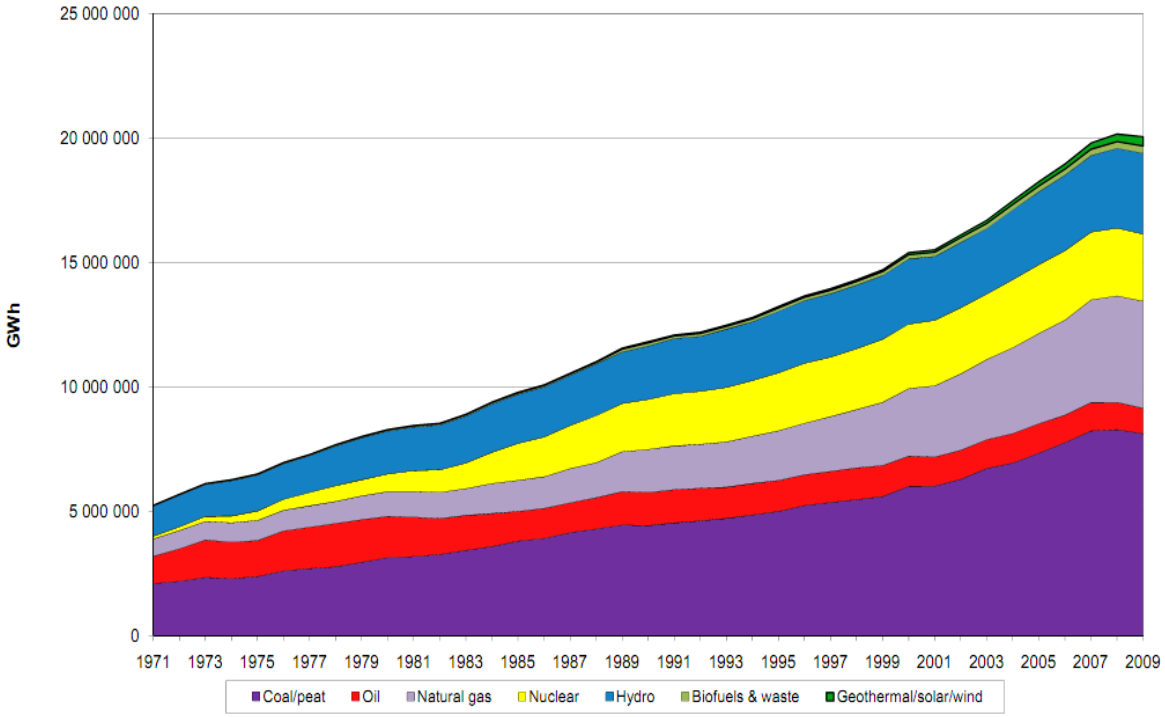

Figure 1.1 Electricity generation by fuels 2009 [38]

In the recent years, the cogeneration systems are receiving more attentions to generate power and process heat. In the view of global cogeneration capacity, number of countries has specific CHP targets, and many have undertaken studies assessing their CHP

potential. Germany intends to double its current share of CHP from 12.5% to 25% of national power generation. Japan has identified that around 11% of its power generation could come from CHP plants. In the USA, the share of CHP could rise from 8% to 12-21% by 2015 [21]. In the present time, there are many researches and practical experiences reveal cogeneration systems are the most appropriate option to install because its capability to provide both economic and environmental friendly. The Self-Energy [10] describes the awareness of Combined Heat and Power (CHP) is a well-proven and fuel-efficient energy technology that unlike traditional forms of power generation utilises the by-product heat that is normally expelled to atmosphere for space heating, water heating (or cooling utilising the addition of an absorption chiller). Typically, this achieves a 35% reduction in energy used as well as ensuring a secure supply from having an independent.

This unique technique not only makes meaning to achieve the power and process heat demands simultaneously from the same fuel source, but also reduces environmental impacts. Furthermore, there are several advantages bring out from the cogeneration systems; one of the advantages is explained by Rosen [5]. Other advantage generally reported from cogeneration thermal and electrical energy rather than generating the same products in separate process include, reduce energy consumption, reduce environmental emissions (due to reduce energy consumption and the use of modern technologies in large, central installations) and more economic, safe and reliable. Cogeneration systems show its potential to be the premier selection to consider as the future of power generation system by cooperating with biomass regarding on previous discussions. Sebastian *et al.* [39] represent the one way of producing nearly CO_2 free electricity is by using biomass as a combustible. Biomass raises the attentions via its capability to

diminish CO_2 emission from combustion process in the recent years and there are two major alternatives can be considered, biomass only fired cogeneration system or dual fuel (co-firing) cogeneration system. As the result from the same study, the overall GHG emissions decrease about 5-6% when these emissions are assessed by means of LCA methodology.

In this thesis, parametric analysis of back pressure steam turbine cogeneration system, condensing steam turbine cogeneration system and double back pressure steam turbine cogeneration system is conducted. The energy and exergy analyses also carry out for the above three biomass based cogeneration configurations.

1.2 Cogeneration systems and its advantages

Cogeneration is well known as producing both power, process heat simultaneously at very high efficiency, and operates at optimum efficiency from the single fuel source.

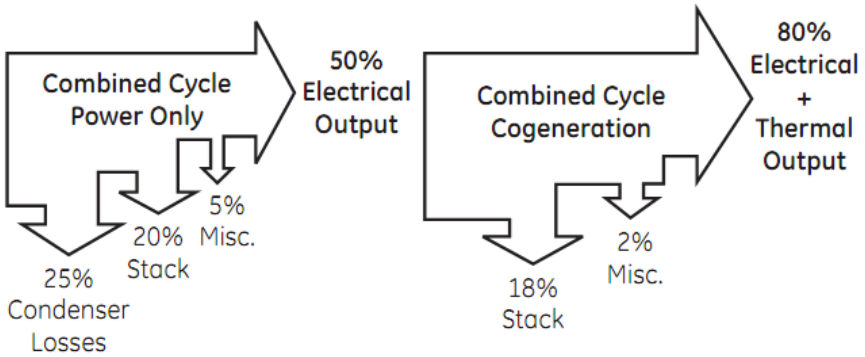

Figure 1.2 Cogeneration system verse traditional energy generation [8]

Figure 1.2 represents the percentage of energy conversion in cogeneration systems compared to the conventional power generation and explains a comprehensible meaning of energy saving. The numbers indicate the cogeneration systems could have 30% better performance than the traditional power generation as well as producing electricity and

heat simultaneously. Rosen [5] also conducted a related study, cogeneration systems are similar to thermal electricity-generation expect that a percentage of the generated heat is delivered as a product (normally a steam or hot water) and the quantity of electricity and waste heat are reduced .Overall cogeneration efficiencies (base on both the electrical and thermal energy products) of over 80% are achievable.

In nowadays, renewable and sustainable make a vital meaning in the future energy generation, because the results of over exploiting current energy resources are becoming a disaster. Therefore, the present work is to investigate the biomass based cogeneration systems, because biomass can balance the carbon dioxide from its own growth and does not add additional CO_2 into the atmosphere. The biomass can continuously use as energy resources and yield very small pollution compared to the conventional power plant, and thus the necessity of increasing the capacity of cogeneration in the near future is the priority decision.

1.3 Types of cogeneration systems

Steam turbine is one of the most versatile and oldest prime mover technologies still in general production power generation using steam turbines has been in use for about 100 years, when they replaced reciprocating steam engines due to their higher efficiencies and lower costs [3]. At the very beginning, steam turbine based cogeneration plant contributes most power and heat, due to the lower demands. However, the consequence of the industrial progress pushes the needs to change the steam turbine based cogeneration to more efficient cogeneration systems such as reciprocating engine based or gas turbine based cogeneration plant. The general operating technique with steam turbine can classify

into two main categories, backpressure steam turbine and the condensing type steam turbine, more details will present in the section 1.4.1 and 1.4.2

Thermal energy equipment cogeneration [23], represent the unique advantage of gas turbine cogeneration systems can produce all or a part of the energy requirement of the site, and the energy released at high temperature in the exhaust stack can be recovered for various heating and cooling applications. Though natural gas is most commonly used, other fuels such as light fuel oil or diesel can also be employed. The typical range of gas turbines varies from a fraction of a MW to around 100 MW. There are two cycle are considered , such as open cycle gas turbine and close cycle gas turbine cogeneration system. The open cycle indicates the air is taking from the ambient at reference condition and passes to gas turbine to generate electricity and the gas is heated up by a combustor. The exhausted gas usually has average temperature between 450 ^{o}C and 600 ^{o}C that is a good supplier to the process heating. The advantage of open loop could lead to have higher pressure and temperature steam production from the heat recovery system and the processed steam can use to produce additional power at lower pressure steam turbine. Furthermore, the working fluid gases circulates in a close loop which is called close cycle, and thus the advantage of closed cycle can ensure the working fluid remains cleaner and will not have any corrosion or erosion problems.

In the description of operating cycle with steam turbines, all the cogeneration plants mainly operate from two categories such as topping cycle and bottoming cycle. Topping cycle adopts the fuel at primary stage to produce power, and then the extracted steam passes to the process heater or heat recovery system to supply heat demand.

The general arrangements of topping cycle are classified as following in “Thermal Energy Equipment” [3].

1. The electricity or mechanical power produces by gas turbine or diesel engine followed by a heat recovery boiler to create steam to drive a secondary steam turbine.
2. The high pressure steam is generated by burning fuels and then expands through a steam turbine to produce work output ,and thus the exhausted steam usually carries lower pressure process steam after the expansion
3. The third type arrangement employs the heat recovery system from an engine exhaust or jacket cooling system following to a heat recovery boiler where it is converted to process steam
4. The fourth type arrangement is based on firing natural gas turbine to drive generator, and the extraction steam goes to a heat recovery boiler that makes process steam.

Bottoming cycle operates at contrary manner from the topping cycle; the thermal energy is producing at primary stage through the fuels combustion, and makes a use of the ejected heat, which is usually carries significant amount of thermal energy to lower pressure steam turbine and produces electricity and process heat. For example, cement industry is the most notable example of using bottoming cycle system because the rejected heat usually carries very high temperature.

1.3.1 Equipment combinations in cogeneration systems

There several units requires in the cogeneration plant such as steam turbine, boiler, waste heat recovery system, or reciprocating engines. However, the combinations of different

components are mainly depending on the required conditions. The following combinations are established base on the current applications in many industrial sectors such as paper industry and sugar mills or rice husk mills.

Table 1- 1 Equipment combinations in cogeneration plant [7]

1. Steam turbine and fired boiler based cogeneration system
Coal or lignite fired with back pressure steam turbine
Liquid fuel fired with extraction and condensing steam turbine
Natural gas fired with extraction and back pressure steam turbine
2.Gas turbine based cogeneration with waste heat recovery
Liquid fuel fired with steam from steam turbine generation
Natural gas fired with HRSG (Heat Recovery Steam Generator) or cogeneration
3.Reciprocating engine based cogeneration system
Liquid fuel fired with steam generation in unfired
Natural gas fired with fired waste heat recovery boiler

The first category characterizes the turbine is driven by the high pressure and temperature steam by various fuels choices such as, coal, liquid fuel and natural gas. This type arrangement is the best scheme to solve the fluctuations of power and process heat demands, and provide the potential solution for energy saving because the power load might be fluctuated in some periods on steam turbine. If fluctuation for power and steam would go hand in hand, the best performance would be available from this system [7].

The second combination bases on gas turbines and heat recovery system in cogeneration plant, the electricity produces at primary stage by expanding high pressure and temperature gas through the gas turbine, which follows by a liquid fired or natural gas fired combustor. The exhausted gas usually transmits a significant amount thermal energy to process heater or heat recovery system steam turbine exhausted steam. The superior

efficiency over the conventional power plant causes the increased popularity in gas turbine based cogeneration systems. The practical applications state with recovery of heat in exhausted gases in a waste heat recovery (WHRB) or heat recovery steam generator (HRSG) to generate the steam overall plant efficiency of around 85% to 90% [7]. The most notable application can be told as cement industry by adopting gas turbine based cogeneration system. Wang *et al* [24] pointed out with the purpose on reduction of energy consumption in cement production process, the cogeneration power plant can recover the waste heat to generate electrical energy with no additional fuel consumption and thus reduce the high cost of electrical energy and carbon dioxide emissions for cement production.

The last combination is typically allocates in the larger size engine which can fire with different types of fuel. Reliability, quick start, and stop, low environmental impacts are the leading factors to make this type arrangement. Moreover, reciprocating engine based cogenerations are frequently installed for more energy in the form of electricity required with moderate heat needed [7].

1.4 Arrangements of steam extraction

The following configurations with various steam extraction arrangements in cogeneration systems are represented in Figure 1.3.The arrangements of different steam withdraw mainly depends on the how much electricity and heating are required.

1. Straight non-condensing steam turbine generator
2. Straight condensing steam turbine generator
3. Single automatic extraction non-condensing steam turbine generator
4. Double automatic extraction condensing steam turbine generator

5. Uncontrolled extraction steam turbine generator

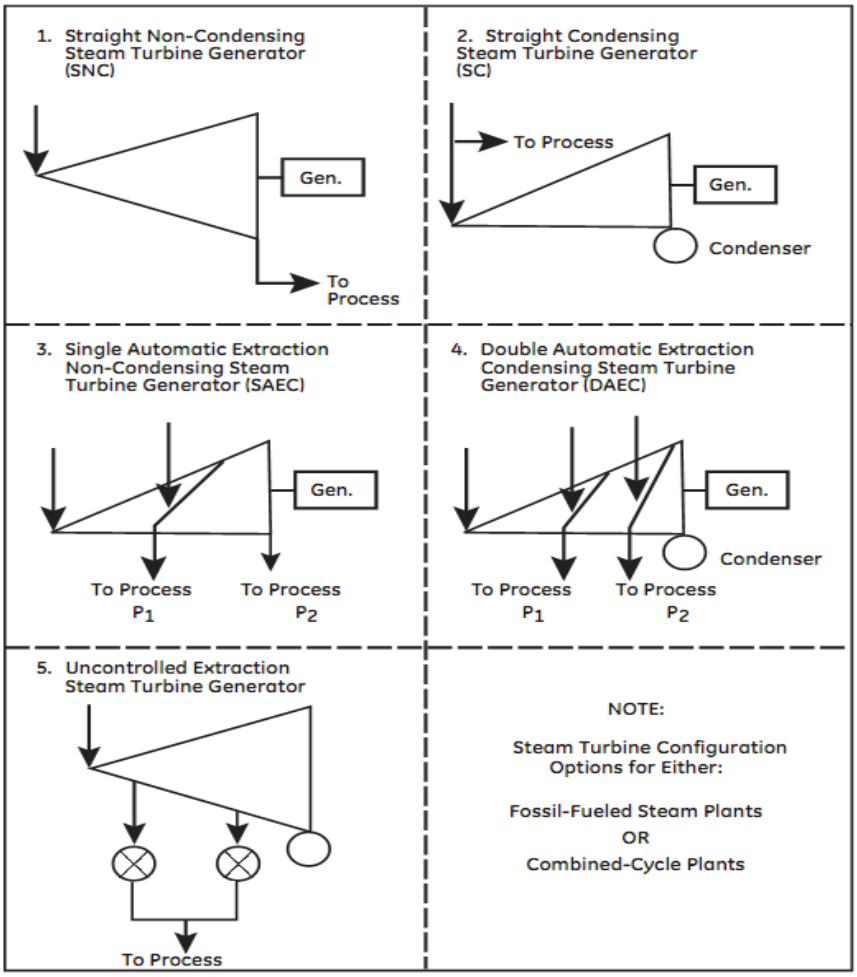

Figure 1.3 Arrangements of steam extraction in cogeneration systems [8]

Arrangement 1, 3 and 4 are adopted to meet the fluctuated demand of process heat because the extracted steam is easily adjustable, and therefore the process heat and electricity generation is fully controlled. In particularly in arrangement 1, there is no additional steam extraction from the steam turbine and this type extraction is common called as back pressure steam turbine. The extracted steam fully directs to process heater and then back to the boiler to prepare next cycle. In this type arrangement, more electricity and process heat are achieved since there is no other steam extracted to spread out the thermal energy. Arrangement 5 is distinct from the other arrangements because

the adoption of vales locates in both extraction steams. The two control valves are adopted to meet the situation where the needed process heat is comparative small to the total power production or due to the safety issue such as starting up or emergency shout down. Moreover, there is no condensing process existing in arrangement 1 and 3, and thus the total power output is directly dependent on process heat demand. The amount of power output influences directly by increasing or decreasing the steam flow rate.

On the other hand, arrangement 2, 4, and 5 consist with a condensing process that makes the power generation more flexible and easily to adjust the extraction pressure because of the system can generate power independently by controlling the quantity of the steam withdraw to the process heater. When the demand of power is high, it can close the valve on the process heater to generate more power or in the peak-off period the more steam extraction to process heater to supply heating demands. Particularly, the steam is extracted before entering the turbine in the arrangement 2 and this type extraction is commonly combined with condensing type steam turbine.

1.4.1 Back pressure steam turbine based configuration

The back pressure steam turbine based cogeneration plant is the priority choice for considering the highest efficiency of producing electricity and process heat simultaneously. Furthermore, the condensing route would be the best option for considering the electricity and heating demands are fluctuated in the different period. Figure 1.4 describes the scheme of simple back pressure based cogeneration plant, the high pressure steam generates from the boiler and directs to the backpressure turbine to generate power from converting thermal energy into mechanical energy for electric generator. Part of steam lefts over the backpressure turbine and still carries some thermal

energy and lastly routes to the process consumer to provide hot steam for heating or drying applications and then back to the boiler to start next cycle. This type of configuration is widely used for low or medium pressure steam and used mostly to meet the high demand of process heat simultaneously.

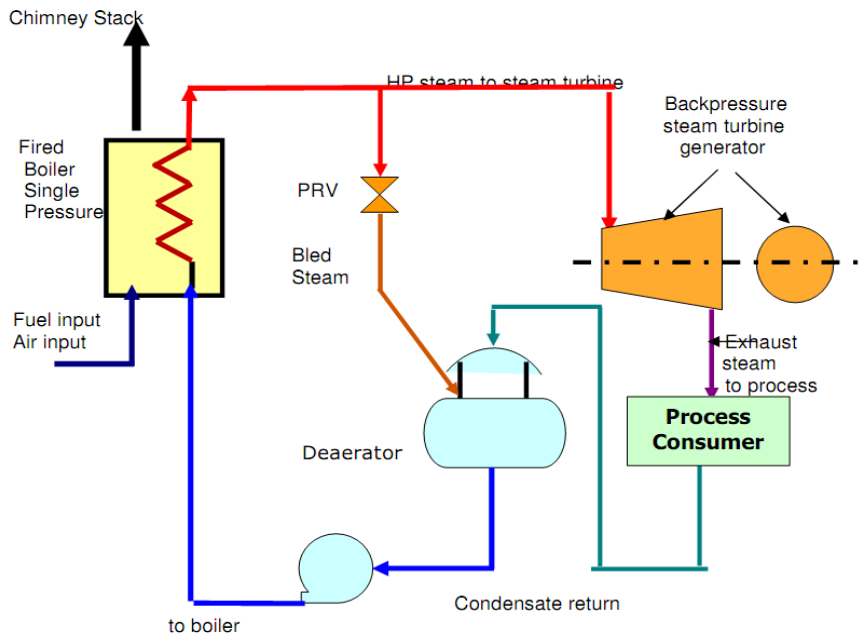

Figure 1.4 Back pressure steam turbine based cogeneration plant [8]

1.4.2 Extraction condensing steam turbine based configuration

In second configuration (extraction cum condensing route), the high pressure and temperature steam expands through the turbine and extracted separately to process heat and some steam condensing to the condenser. At the first stage of steam extraction, part of the steam expands to the process heater to supply process heat, and the remaining steam flows back to boiler to prepare the next cycle. This type of configuration is benefited from easily control the power generation load by proper regulation of the steam flow rate because the steam flow rate is adjustable that is not like the Extraction cum back pressure route which direct all the steam into process heat.

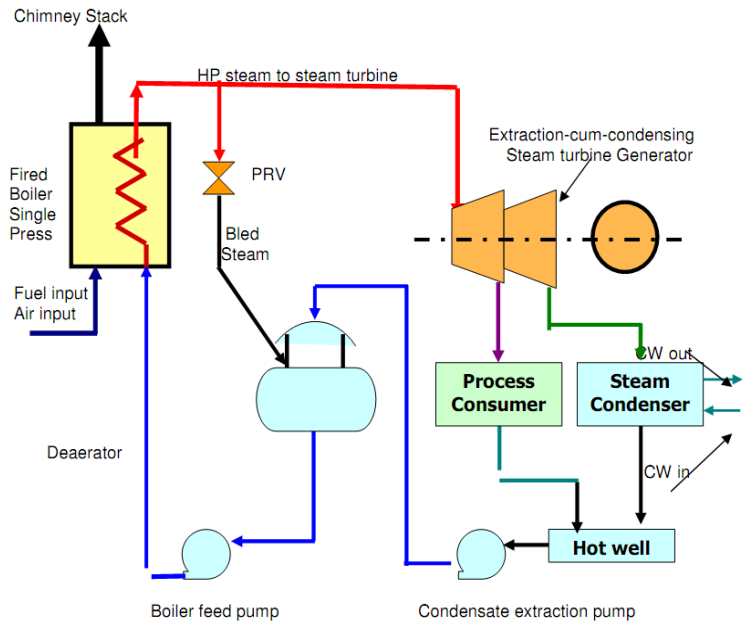

Figure 1.5 Extraction condensing steam turbine based cogeneration plant [8]

1.4.3 Condensing route based on dual fuel configuration

The last configuration (condensing route base on dual fuel system), which means the fuel selection not limited to a single fuel input, because of feedstock might be fluctuated in seasonal growths. This configuration has significant potential to be developed and integrated over the others which have been discussed above, because this type of system can burning several different types of fuels, not only limited in single fuel. It is capable of supplying year-round stable surplus power with support of fuels such as natural gas, coal, and lignite, and rice straw, husk during off-season [5]. In the view of emission, biomass definitely is a good option to compensate the emission problem by it is capable not to increase the net carbon dioxide into atmosphere, while providing the energy.

1.5 Selection and evaluation of cogeneration systems

Cogeneration is established to achieve the power and heat demands at the same time with very high efficiency, and therefore the assessment of necessity is important to consider

before making the decisions. To understand the heat to power ratio (HPR) is the very first step, the amount of power produced over the generated process heat that is primary investigated to evaluate the necessity of installing cogeneration. Otherwise, the additional cogeneration has no meaning on the energy saving if the cogeneration plant generates too much process heat.

In some literatures, power to heat ratio (PHR) is used instead of (HPR), the ratio between the power and heat is studied to have the specific average range. For instance, the typical PHR is about 0.15 to 0.75 for the steam turbine based cogeneration, and the overall efficiency can reach as high as 80%. In some applications, heat to power ratio could not provide sufficient information to evaluate the necessity of cogeneration plant, therefore the additional methodologies need to employ into the evaluations.

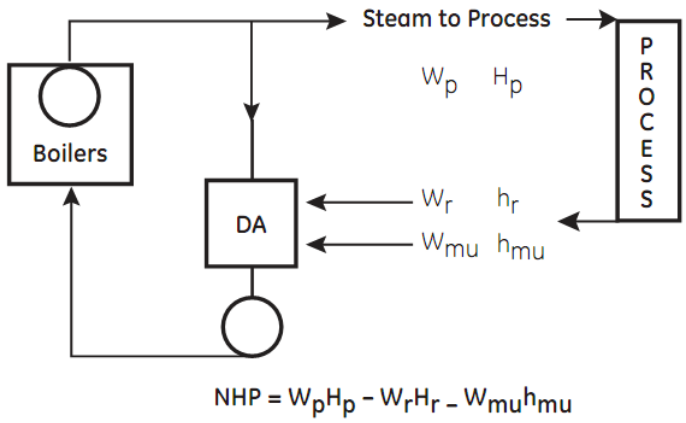

Figure 1.6 Description of net heat to process [8]

Net Heat to Process (NHP) and Fuel Chargeable to Power (FCP) employ to estimate and compare the alternative of using cogeneration system in power and heat generation. NHP uses to determine the amount of the net heat transferring to the process, and the net heat should remain constant for all the time. Especially when considering the different condition for gas and steam turbine configurations export energy to process. By doing the

evaluation in accessing net heat, process could ensure the system to remain stable supplying process heat with better performance.

FCP is used to evaluate the efficient of cogeneration plant between the plant produces of power and heat to the plant only generates steam. The detailed definition describes in the "cogeneration application consideration", the incremental fuel for the cogeneration plant relative to the fuel that is needed for a plant supplying steam only, divided by the net incremental power generated by cogeneration [9].

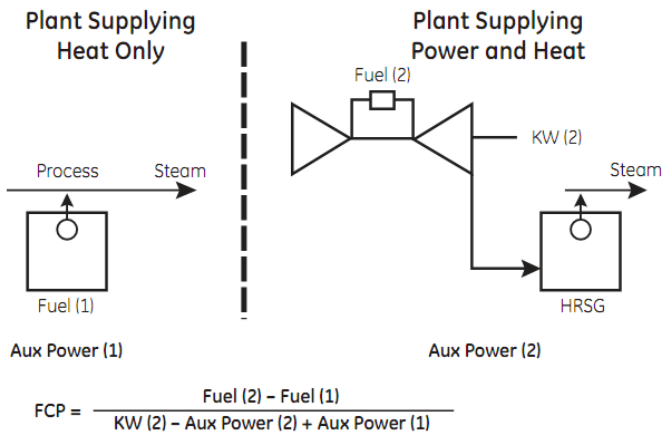

Figure 1.7 Description of fuel chargeable to power [8]

For simply, FCP provides an alternative means of expressing the net fuel rate of prime mover (cogeneration) applications that effectively use rejected heat . The typical range of FCP value describes as following, in "thermally optimized" steam turbine cogeneration cycles, steam is expanded in non-condensing or automatic-extraction non-condensing steam turbine-generators that extract and/or exhaust into the process-steam header(s). The FCP for these systems is typically in the 4000 to 4500 Btu/kWh HHV (4220 to 4750 kJ/kWh) range [8].

1.6 Objectives

The present thesis attempts to contribute the investigation of biomass cogeneration systems. Three configurations are considered, back pressure steam turbine cogeneration system, condensing steam turbine cogeneration system and double back pressure steam turbine cogeneration system.

- To perform the parametric analysis of varying operating conditions (temperature: $340\,^{o}C$ to $520\,^{o}C$ and pressure: 21bar to 81bar), and look for solutions to improve the cogeneration performance and production of power and work output.
- To compare the results of three configurations with respect to energy and exergy analyses and choose the best performance responds to the effect of types of fuel and operating conditions.
- The fuels in the analysis for three cogeneration systems are bagasse, rice husk, and combinations of bagasse and coal.
- In order to accomplish current study, all the simulations have been performed by the Engineering Equation Solver (EES), and accompany with the hand calculation.

1.7 Outline of the thesis

This thesis is structured as the follows.

- Chapter 1: Presents the background of the cogeneration systems
- Chapter 2: To study the relevant literature reviews and practical studies which are related in this thesis
- Chapter 3: Describes the details in the three different cogeneration configurations, which involve in this study based on firing bagasse and provides the methodologies and assumptions utilized in the analysis. All the required data and fuels composition present in this chapter
- Chapter 4: Description of the study results from the analysis which includes analysis of parametric studies, emissions
- Chapter5: To summary the result, findings and provide the further recommendations for the future work, including suggestions of possible improvement of cogeneration systems.
- Appendix includes all the calculations and simulation code

CHAPTER 2: LITERATURE REVIEW

There seems to have less number of studies or reports on the energy and exergy analyses of biomass based cogeneration systems in the open literatures, because of using biomass for producing power and process heat is relatively new technology compared to the conventional coal fired power generation. The literatures and relevant studies are taken from three categories; such as background review, energy and exergy analyses review, and types of fuel analysis. In the recent years, cogeneration systems become the popular technology to implement into many industrial or residential applications as producing power and process heat.

2.1 Background review

A comprehensive study in the cogeneration applications were conducted by John and Martin [8].They introduced the classification of different types of steam and gas based cogeneration systems with various combination of steam withdrawal that helped to identify the combinations and arrangements of the component locates in the cogeneration plant. In addition, the study also included the practical methods such as net heat to process and fuel chargeable to power to estimate the usability in implementing the cogeneration systems to the industry applications.

In the present time, cogeneration system approves its potential to compensate the incredible energy consumption rate in the current sharing of primary energy supply. According to the expectation, Germany intends to double its current share of CHP from 12.5% to 25% of national power generation and Japan has identified that around 11% of its power generation could come from CHP plants. In the USA, the share of CHP could

rise from 8% to 12-21% by 2015 [7]. Smouse *et al*. [6] gave credit to the biomass cogeneration system in sugar industry in India, according to their expectation the energy demand reached to 300,000 MW for the next 25 years. Biomass based cogeneration system not only provided a cost effective to produce electricity and hot steam compared to the conventional power plant, but also presented a solution to the pollutions problems as the Global Environmental Protection pointed out the consequence in terms of reducing of greenhouse emissions. Lastly, the feasibility and cost effectiveness also described by Branch [17]. They undertook a comprehensive analysis in implementing rice-husk cogeneration system to a small or medium scale industry application and included the economic analysis as well. This report specifically compared the conventional oil based captive power generation to the proposed rice husk fuelled cogeneration. As the result, the feedback from the new system was very impressive due to its fuel saving and environmental friendly, even though the initial cost on installation was higher. In the view of CO_2 emissions, Jayen *et al* [20] proved the matters of concerning emission to be less impact, and draw conclusion to couple of cogeneration and renewable made for a very strong proposition because it led to the supply both lower carbon emission in electricity generation and process heat production. The results of cooperating biomass with cogeneration system approved to diminish the emission problems efficiently and therefore the emerged high potential to increase its capacity that was expected in the near future.

2.2 Relevant studies in energy and exergy analyses of cogeneration systems

Rosen and Cornelia [46], conducted the study on differentiating energy and exergy, and recommended using exergy analysis to understand and improve the efficiency of

electrical power technologies. This paper essentially explained and provided details in differentiating energy and exergy analyses. According to the result, the exergy analysis was concluded to have significant role in evaluating and improving the efficiencies of electrical power technologies and provided a useful tool for engineers and scientists as well as decision and policy makers.In some situations, the used of energy analysis could be misleading and confusing while doing the energy analysis, therefore by cooperating exergy analysis could solve that issue easily and provided more details on the energy transferring through each component. For that reason, the present work will include both energy and exergy analysis to make the investigation be more understandable and effectively in the cogeneration performance.

By cooperating energy and exergy, analyses has been approved as the most effective methodologies to evaluate the energy systems. Kamate and Gangavati [27] undertook the analysis on 44 MW bagasse based cogeneration plant in India. They summarized equations, and the methodologies to determine the exergy flow of each component. A comprehensive analysis on energy and exergy, and the presented configuration system are going to help as considering the different components need to be used in the current analysis. In addition, Bilgen and Kaygusuz [41] also gave credit to the energy and exergy analyses, which were the effective thermodynamic method for using the conservation of mass and energy principle together with the second laws of thermodynamic for the design and analysis of thermal systems. This particular study presented the completed methodologies and mainly focused on exergy analysis that helped to identify the process of estimating the physical, chemical exergy and exergy destruction. During the analysis aspect, Kanoglu and Dincer [28] pointed out, the exergy transferring in the process heater

became one of major difficulty to evaluate in some situations, because there was no sufficient information provides, and sometimes the actual response mainly depended on the actual practices. The original calculation of exergy flow was described as

$$\dot{E}x_{heat} = \int \dot{Q} * (1 - \frac{T_0}{T})$$

T presented the temperature at which the heat was transferred that could also refer to the boundary temperature of the equipment. However, this relation was not accurate to the practical value unless the functional relationship between the rate of heat transfer and temperature were known. In this case, the assumption was made; the extraction steam used to heat up the cold water at reference condition through process heater.

$$\dot{E}x_{heat} = \dot{m}_{cold} * (h_{out} - h_{in} - T_0 * (s_{out} - s_{in}))$$

In addition, they conducted an assessment on several combinations of the cogeneration systems, which included steam turbine based power plant and gas turbine engine based cogeneration plant. They also listed several general energy an exergy equations on investigating the performance of various cogeneration systems. At the end, they approved the exergy analysis was a useful tool in performance assessment of cogeneration system and permitted meaningful comparisons of different cogeneration system based on their merits.

Regarding on the exergy analysis, chemical and physical exergy are the two primary parameters needed to be determined, before processing to the overall exergy efficiency.In particular, Kamate and Gangavati [15] described the methodology in determining fuels chemical exergy, and the limitation was made when the mass ratio of oxygen to carbon (O/C) in the range from 0.667 to 2.67. They also performed the second law analysis on

the cogeneration systems, which included backpressure steam turbine based and condensing steam turbine based cogeneration plant. The analysis results are helpful in the current thesis as determining, which types of steam turbine to apply by means of considering the maximizing process heat generation.

2.3 Relevant studies in industrial applications

In the performance evaluation aspect, the study of improving more efficient cogeneration plants had been conducted by Premalatha *et al.* [45]. "Efficient Cogeneration Scheme for Sugar Industry", this paper was prepared specific on considering the result of obtaining higher efficient power generation by applying the high pressure boilers and condensing cum extraction turbines for processing hot steam. Overall, the results proved the replacement of higher pressure boiler could provide more efficient power generation, and because of that, the estimation of different operating conditions were carried out in the present work by way of considering to have better performance in the cogeneration systems. In addition, the feasibility in implementing additional cogeneration system in the current agricultural industry that had been approved to be benefited by Mujeebu *et al.* [16].They presented a case study on the rice husk fueled steam turbine cogeneration for a rice mill with surplus power and studied the technical and economic feasibility of implementing a steam based cogeneration and finally concluded the additional cogeneration plant in the rice mills provided option for surplus power and suggested a steam turbine with topping cycle to operate in the Maruthi Rice Mill. According to the results of the additional cogeneration system, the excess electricity production 200KW was obtained in its full time operation. In the selection of fuels, natural gas becomes a popular option in the current energy resources. In the present time, the natural gas fired

cogeneration with gas turbine start attracting attention to consider as the combustible since the exhausted gas is cleaner and less emissions compared to the conventional coal fired facility. The study was conducted by Reddy and Butcher [42], they examined the influences of the different operating conditions such as reheat, intercooling, ambient temperature and pressure ratio to the system performance. The results approved the reduction of carbon dioxide and presented the second law efficiency variation from the changing pressure ratio, temperature ratio and the degree of reheat. The similar study of emission characterization and evaluation of natural gas- fuelled cogeneration also performed by Canova A et al [47]. They completed the analysis on evaluating emission in the cogeneration system and internal combustion engines. The result approved the adoption of natural gas-fuelled DG (Distributed Generation) cogeneration technologies could enhance overall energy efficiency and provide relatively low carbon content from utilizing natural gas, and a significant reduction of global impact in terms of CO_2 emission with respect to the separate production of electricity and heat.

CHAPTER 3: SYSTEM CONFIGURATIONS AND METHODOLOGY

This chapter describes three types steam turbine based cogeneration plants, which currently employ in agricultural industries, and the most common industries include sugarcane and rice husk mills industry. The location is one of the main concerns for installation, while considering the fuel transportation is an essential matter on energy saving aspect, and therefore biomass fired cogeneration plants are usually built nearby the fuel supplementary. The investigation in three different configurations will carry out by the energy and exergy analyses, and the analyses emphasis on the assessment of steam inlet conditions to influence power output and process heat. The quality of steam has a meaning of how much thermal energy can carry by the steam. Therefore, the necessity of analysis in verifying the steam conditions could provide details to determine the optimum temperature and pressure combinations for each configuration. The investigation is performed with the parametric analysis of increasing temperature at constant pressure or the selected temperature and pressure such as increasing temperature from 340 ^{o}C to 520 ^{o}C and pressure between 21bar and 81bar.

In addition, the assessment of exergy destruction is also conducted in the current analysis, besides the system efficiency assessment. The thermal energy loses from the equipment during the operation that has been approved in many literatures and studies. In the definition of exergy destruction, the generation of entropy always destroys exergy, because of that the useful work is reduced and cannot recover, and sometimes exergy destruction can refer to irreversibility such as chemical reaction, expansion work,

compression work, and heat transfer through the temperature difference that always involves entropy generation. In order to evaluate the overall cogeneration performance, the study of exergy destruction could help to identify the defect within the cogeneration plant, and the performance can be improved by the redesign or modification of the existing cogeneration plant from considering reduction of heat lost in the further improvement and development.

Finally, the fuel characteristic is important to the cogeneration performance, the investigation of the different fuel characteristic could assist to identify the relation between cogeneration performance, and the heating characterises. Bagasse, rice husk, and coal are the three combustibles to be considered in the present evaluation.

3.1 Bagasse fuelled simple back pressure steam turbine cogeneration plant (Configuration 1)

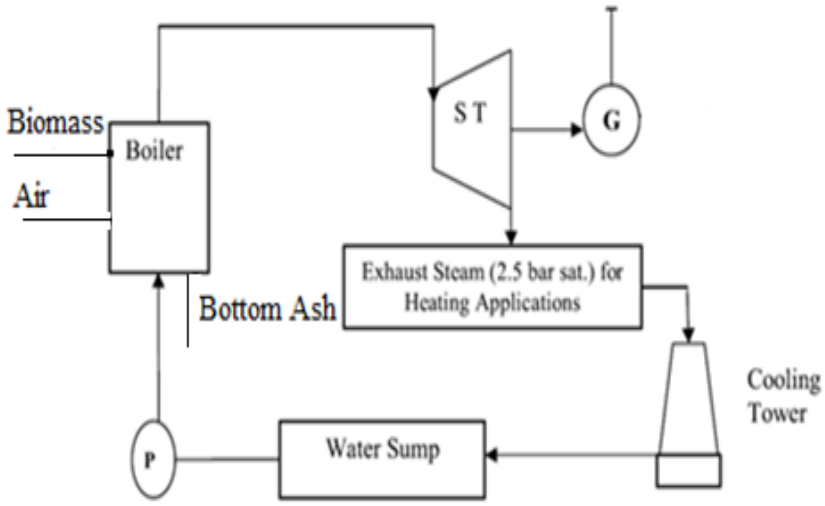

Figure 3.1 Schematic diagram of rice husk fuelled cogeneration system [16]

Figure 3.1 represents a scheme of a typical rice husk fuelled cogeneration plant and is used in a case study from," Rice husk-fuelled steam turbine cogeneration for a rice mill

with power export" [16]. This specific arrangement is used to achieve the demands of 135 MJ/ton and 1500 MJ/ton of electricity and total heating load respectively. By studying the existing configurations, the more details and cycle analysis process are given.

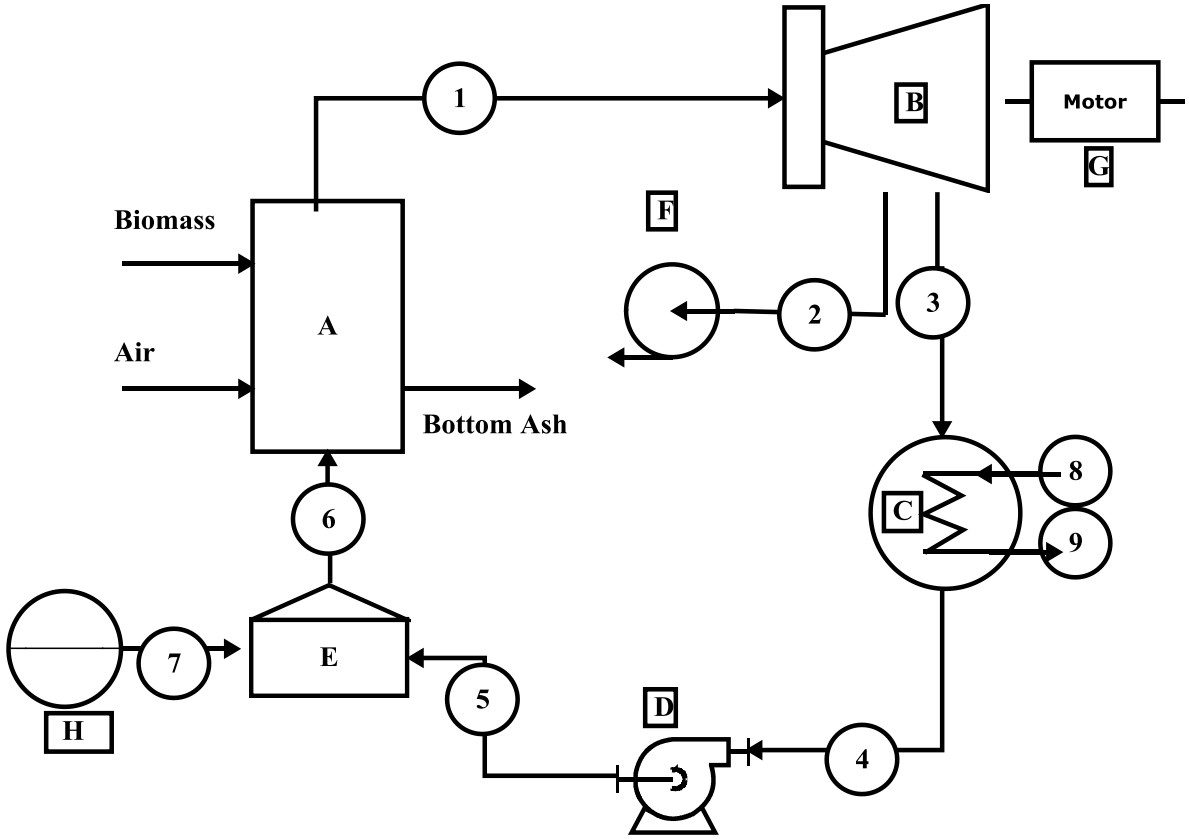

Figure 3.2 Proposed simple back pressure steam turbine cogeneration plant (Configuration 1) [15]

In the present analysis, some modifications have been made upon the rice husk fuelled steam turbine cogeneration plant, which is proposed in the Figure 3.2. The water pumps to boiler level pressure and mixes with the make-up water due to some of steam extract to centrifugal for mills uses and does not return to the system. The steam flow rate and operating conditions of each component are taken from a typical 2500tcd sugar factory, which is studied in "exergy analysis of cogeneration power plant in sugar industries" [15].

Table 3-1 List of Components

Label.	Components
A	Boiler
B	Back Pressure Steam Turbine
C	Process Heat
D	Circular Pump
E	Mixing Chamber
F	Centrifugal (Mill uses)
G	Generator
H	Make up Water

Figure 3.2 describes the basic back pressure steam turbine based cogeneration plant and this type arrangement is widely used in many rice mills or sugarcane industries because back pressure is the one could produce the needs of process heat and power at very high efficiency simultaneously. The system consists with a boiler, backpressure steam turbine, process heater, and a circular pump. At the first stage, circular water enters the boiler for heating up to the required steam condition; after reaching to the desired steam condition at state 1.The high pressure and temperature steam expands through the back pressure steam turbine to produce power and process heat. The primary extracted steam leads to the centrifugal for the mills uses and does not return to the plant, and thus the remaining steam directs to the process heater to generate process heat. At the end, the processed water flows back to the boiler via the circular pump at state 5 to complete one cycle.

3.2 Assumptions

The following assumptions are made to simplify the present work before processing to the analysis aspect, and thus the same assumptions are applied to all three different configurations in the present analysis

- All the processes are considered as adiabatic process under the plant operations and the heat losses from piping is also ignored.
- Pressure drops ,kinetic energy ,and the change in elevation (potential energy) of different components are negligible, in addition all the presented evaluations are found under steady flow conditions
- Ambient temperature and pressure are taken as $25^{o}C$ and 1.013bar
- Boiler combustion efficiency is 85% and 15% heat lost is taken into consideration in natural gas combustor.
- The processed steam extract to the process heater at 2.5bar ,and the out flow considers as saturated liquid
- All the biomass fuels are burned directly under receiving condition with 45% to 50% moisture contains, and the evaluation of fuels chemical exergy and heating values are based on ultimate analysis
- In the most practical experience and studies, all the steam turbines are assumed to have average 85% isentropic efficiency and usually pumps could have very high efficiency ,thus the pump efficiency is taken as 100% .Moreover, the mechanical efficiency is considered as 100% because the most modern generator can achieve as high as 98% to 99%.
- The chemical exergy of fuel is considered as base to determine the overall exegetic efficiency of the plant and the physical exergy of flue flows is used to determine the loss of exergy in components of cogeneration plant [15].
- To evaluate the quantity of exergy transfers through process heater can be written as, $\dot{E}x_{heat} = \int \dot{Q} * (1 - \frac{T_0}{T})$ .However, T presents the temperature at which heat is

transferred that also mean boundary temperature of the equipment; this relation is of a little practical value unless the functional relationship between the rate of heat transfer and temperature is known [28]. Therefore, the extraction steam is used to heat up the cold water at reference condition through process heater. $\dot{E}x_{process-heat} = \dot{m}_{cold} * (h_{out} - h_{in} - T_0 * (s_{out} - s_{in}))$

3.3.1 Energy analysis of cogeneration configuration 1

Water is absorbing the heat from burning bagasse at average calorific value 7650 kJ/kg in the directly burned boiler and reaches to required steam condition at 340 ^{o}C, 21bar. The quantity of work output from the turbine is described in the equation 3.1.In this case the assumption is made, the isentropic process $S_1 = S_2 = S_3$ with 85 % turbine efficiency

$$\dot{W}_{turbine} = \dot{m}_1 * h_1 - \dot{m}_2 * h_{2Act} - \dot{m}_3 * h_{3Act} \tag{3.1}$$

Before obtained the actual enthalpy, the theoretical enthalpy value is defined via the given condition $S_1 = S_2$ and 8bar for the steam extracting to the centrifugal, and thus the actual enthalpy can be written as equation 3.2 with 85% efficiency, and the same manner applies to find the enthalpy at state 3.

$$h_{2Act} = h_1 - 0.85 * (h_1 - h_2) \tag{3.2}$$

Part of the steam extracts to centrifugal for the mills uses and rest of the steam directs to the process heater from state 3 to 4, the transferred process heat is used to heat up the cold water at reference state , and the amount of heat transfer can be written as equation 3.3

$$\dot{Q}_{process} = \dot{m}_3 * h_{3Act} - \dot{m}_4 * h_4 \tag{3.3}$$

Steam turns into saturated liquid after passing through the process heater, and the formation of saturated liquid is assumed, in order to simplify the analysis in the current analysis. Finally, the saturated water pumps to the required boiler pressure, before entering the boiler, the pump work is described by the boundary work

$$\dot{W}_{pump} = \dot{m}_5 * v_4 * (p_5 - p_4) \tag{3.4}$$

The overall energy efficiency is defined in the equation 3.5, total work output, and the process heating supply over the amount of thermal energy supply to the boiler.

$$\eta_{cogen,energy} = \frac{\dot{W}_{turbine} + \dot{Q}_{process}}{\dot{m}_{fuel} * LHV_{fuel}} \tag{3.5}$$

3.3.2 Exergy analysis of cogeneration configuration 1

In the next section, the explanations of exergy analysis approaches are presented, the fundamental equations can be written as equation 3.6, which is used to calculate the exergy of a flow stream or called flow exergy. Equation 3.6 uses to evaluate the flow exergy base on the control volume because most of the components such as turbines, heat exchanger, pipes and compressor are open to the ambient, that means the mass flow will across the system boundary. Moreover, the evaluation is under steady flow condition without any changing in the mass, energy, entropy, and enthalpy changes during the operations.

$$\sum (1 - \frac{T_0}{T}) * \dot{Q} - \dot{W} + \sum_{in} \dot{m} * \dot{e}x_{in} - \sum_{out} \dot{m} * \dot{e}x_{out} - \dot{E}x_{destroyed} = 0 \tag{3.6}$$

The further expansions of this equation are shown in equation 3.7 and 3.8, the assumptions have made to place all the components on the same elevation, and therefore kinetic energy and potential energy are ignored in the analysis.

$$Ex_{flowing} = (u - u_0) + P_0 * (v - v_0) - T_0(s - s_0) + gz + (P - P_0) * v \quad (3.7)$$

$$Ex_{flowing} = (h - h_0) - T_0 * (s - s_0) \quad (3.8)$$

According to the equation 3.6 flow exergy also transfers by the work or heat; however the exergy transfer by heat cannot directly use in the evaluation, and thus the conversion form is written as equation 3.9

$$\dot{E}x_{heat} = \left(1 - \frac{T_0}{T}\right) * \dot{Q} \quad (3.9)$$

In addition, the exergy destruction is always increased when flow exergy is transferring between the components with boundary temperature is higher than ambient. As stating in "Thermodynamic an engineering approach", irreversibility such as friction, mixing, chemical reactions, heat transfer through a finite temperature difference, unrestrained expansion, nonquasi-equilibrium compression, or expansion always generate entropy [44]. In the most analytical case, the exergy destruction is also referring to lost work or irreversibility, which can be found via the entropy generation and written as

$$Ex_{destroyed} = T_0 * S_{gen} \quad (3.10)$$

The another approach is to identify the flow exergy at each state by applying equation 3.8, and then calculate the difference between inlet flow exergy and outlet, as the result the calculated values present the work lost undergoing the process and can be written by equation 3.11.

$$\dot{E}x_{destruction} = \dot{E}x_{in} - \dot{E}x_{out} \quad (3.11)$$

Overall exergy efficiency is evaluated via equation 3.12, total work output plus the exergy transferring to process heat over the amount of exergy transfers by the fuels and the combustion efficiency is taken into consideration.

$$\eta_{cogen,exergy} = \frac{\dot{W}_{total} + \dot{E}x_{process}}{\dot{m}_{fuel} * \dot{E}x_{fuel}^{chemical}} \tag{3.12}$$

Note: The exergy transfer in the process heater is expressed as

$$\dot{E}x_{process} = \dot{m}_{coldwater} * (h_9 - h_8 - T_0 * (s_9 - s_8)) \tag{3.13}$$

The assessment of fuel exergy is estimated by physical and chemical exergy of the fuel, but the physical exergy can be ignored since the fuel is supplied at the same condition as ambient in the present analysis. Fuel chemical exergy is evaluated from equation 3.14, which carries out from the study of exergy analysis of cogeneration power plant in sugar industries [15].

$$Ex_{fuel-chemical} = [NCV + w * h_{fg}] * \Phi_{dry} \tag{3.14}$$

NCV is the net calorific value of the specific fuel used and w indicates moisture content in the fuel. The value of h_{fg} depends on the reference temperature from the water substance. Equation 3.15 is used to determine the ratio Φ_{dry} of chemical exergy in the dry solid fuel and limited to the ratio of oxygen to carbon. As stating by Kotas [25], the ratio of dry solid fuels to the net calorific value of fuel (NCV), with mass ratio of oxygen to carbon (O/C) varies from 0.667 to 2.67 in general.

$$\Phi_{dry} = \frac{1.0438 + 0.1882 * (\frac{h}{c}) - 0.2509 * [1 + 0.7256 * (\frac{h}{c})] + 0.0383 * (\frac{n}{c})}{1 - 0.3035 * (\frac{o}{c})} \tag{3.15}$$

Where h, c, n and o are told as hydrogen, carbon, nitrogen and oxygen, and the required mass fraction of each element is presented in Table 3-1, bases on the ultimate analysis

3.4 Bagasse fuelled back pressure combined with condensing type steam turbine cogeneration plant (Configuration 2)

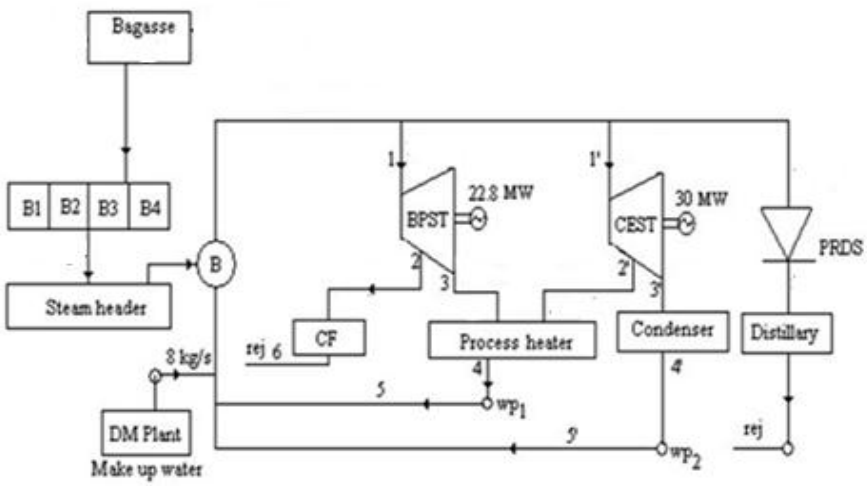

Figure 3.3 Ugar sugar mills Ltd cogeneration plant [27]

Table 3-2 Operating conditions in Ugar sugar mills Ltd cogeneration plant

Stream	Temperature (°C)	Pressure (bar)	Mass Flow Rate (kg/s)
1	490	65	33
1'	490	65	39
2	N/A	8	5
3	N/A	2.5-Sat Liquid	28
2'	N/A	2.5-Sat Liquid	25
3'	N/A	0.065	14
Fuel	25	1.013	33

Figure 3.3 and Table 3-2 describe the scheme of a modern 44 MW bagasse based cogeneration plant located in India, and could serve as model for other sugar mills interested in setting up cogeneration plants. This specific configuration applies to satisfy 44 MW of electricity and 128MW process heat. The reviewing of the existing cogeneration plant is going to help when I was trying to determine the suitable operating condition to fit into my proposed configurations as the following.

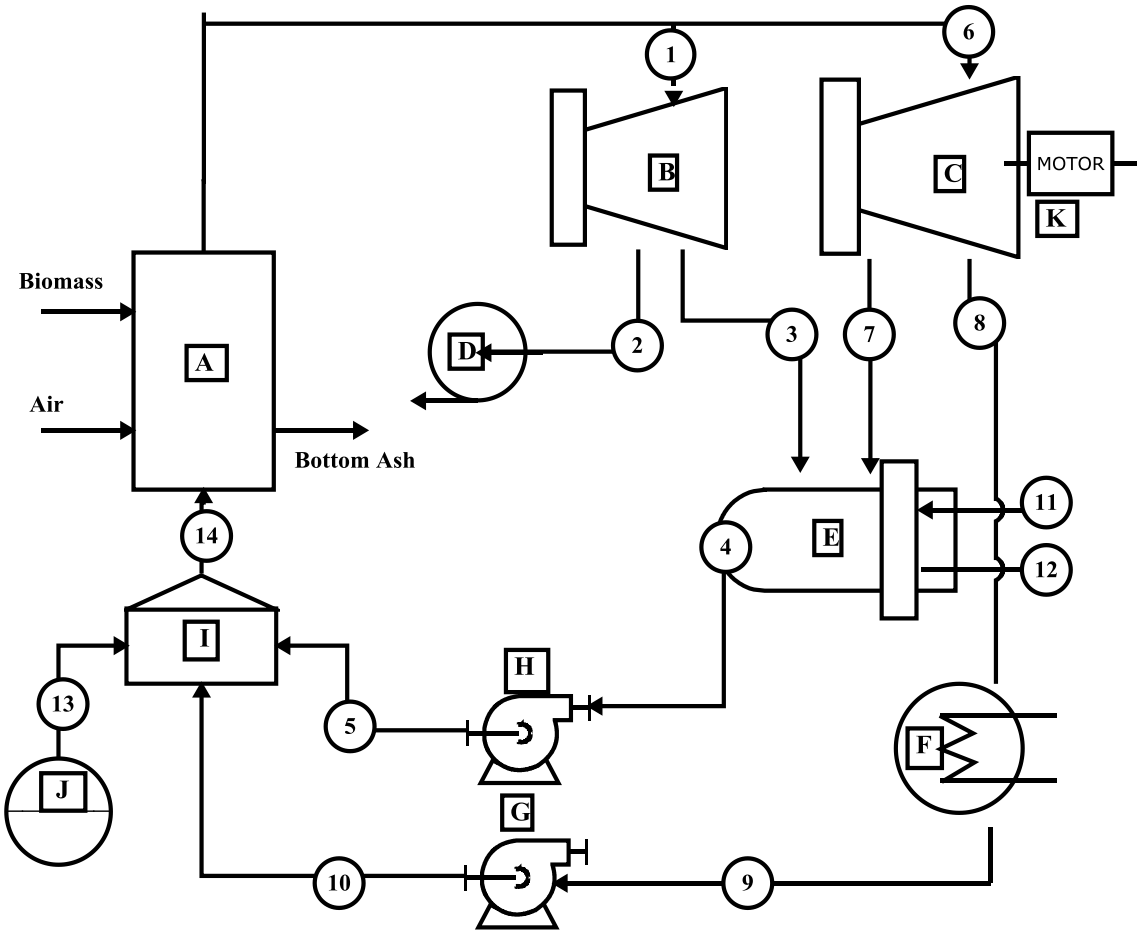

Figure 3.4 Proposed back pressure combined with condensing type steam turbine cogeneration plant (Configuration 2)

Table 3-3 List of Component

Label.	Component
A	Boiler
B	Steam Turbine (BPST)
C	Steam Turbine (CEST)
D	Centrifugal (Mill uses)
E	Process Heat
F	Condenser
G	Circular Pump 1
H	Circular Pump 2
I	Mixing Chamber
J	Make up Water
K	Generator

Figure 3.4 represents the scheme of the modified cogeneration plant and the ideas come from the existing cogeneration system from the above arrangement of equipment. In order to have maximum efficiency, the modifications have done as following. the elimination of the additional steam flowing to distillery in the consideration of maximize the power and process heat production, but the percentage of steam extraction from both steam turbine and some operating conditions are considered to be the same from the same study. At first, high pressure and temperature, steam generates from the boiler, which is direct fuelled with bagasse at average calorific value 7650kJ/kg, and thus the superheated steam is going to expand through BPST and CEST at 40% and 60% respectively of the total steam flow rate. At first stage of steam extraction in the BPST, 15% steam extracts from the BPST to centrifugal for mill uses and remaining 85% directs to the process heater at state 3. In the next condensing type steam turbine,64% of steam extracts from the CEST to the process heater and the remaining 36% steam directs to the condenser at state 7 and 8 respectively. The extracted steam will draw out to a single process heater, and the steam quality turns into saturated liquid after passing through the process heater and condenser at the corresponding pressure. Furthermore, the produced process heat is used to heat up the cold water from the ambient condition at state 11 and 12. The processed liquid water at state 4 and 9 will pump up to the boiler pressure level, and then flows back to mixing chamber, at the meantime, the makeup water flows into the mixing chamber to replenish the water which adopts to centrifugal applications in the mills

3.4.1 Energy analysis of cogeneration configuration 2

Circular water enters boiler from the mixing chamber where the makeup water mixes with the processed water from the process heater at state 4 and the steam expands via

CEST to condenser at state 9. The total fuels supply at 23.5kg/s in the present analysis, and 85% combustion efficiency is considered as well since the fuel is not possible to have 100% energy conversion .There three types fuel combinations are taken in the investigation; and the overall heating supply can be written

$$\dot{Q}_{\text{supply}} = \dot{m}_{fuel} * LHV_{fuel} * \eta_{combustion} \tag{3.16}$$

The total steam produces at 50kg/s, and the assumptions made to have 40% of the total steam flows to the back pressure steam turbine (BPST) and 60% flows to condensing steam turbine (CEST). The total work produces from both turbine is found in equation 3.17 and 3.18.

$$\dot{W}_{BPST} = \dot{m}_1 * h_1 - \dot{m}_2 * h_{2Act} - \dot{m}_3 * h_{3Act} \tag{3.17}$$

$$\dot{W}_{CEST} = \dot{m}_6 * h_6 - \dot{m}_7 * h_{7Act} - \dot{m}_8 * h_{8Act} \tag{3.18}$$

The actual enthalpy is obtained from the given condition with 85% turbine isentropic efficiency. For example, the actual h_2 and h_3 are estimated via equation 3.19 and 3.20, and the same manners apply to find actual enthalpy in CEST at state 7 and 8.

Note: The theoretical enthalpy is determined via isentropic efficiency at given pressure, such as, S_1=S_2 and 8bar in state 2 and S_1=S_3 and 2.5 bar in state 3.

$$h_{2Act} = h_1 - 0.85*(h_1 - h_2) \tag{3.19}$$

$$h_{3Act} = h_1 - 0.85*(h_1 - h_3) \tag{3.20}$$

In the analysis of process heater, steam extracts from the CEST at 64% and the remaining 36% with lower thermal energy directs to the condenser. In the heating supply aspect, both extracted steam flows to single process heater, process heat is found by equation

3.21, and the temperature at the out flow of the cold water being heated up can express as 3.22

$$\dot{Q}_{process} = \dot{m}_3 * h_{3Act} + \dot{m}_7 * h_{7Act} - \dot{m}_4 * h_4 \tag{3.21}$$

$$\dot{Q}_{process} = \dot{m}_{cold} * cp * (T_{12} - T_{11}) \tag{3.22}$$

Note: cp is specific heat of water substance, and T_{11} is at ambient condition

At the end of process heater and condenser, lower quality feed water turns into saturated and then leads to the mixing chamber via pressure pumping up to the boiler level at state 5 and10. In order to estimate the pump work, the specific volume of processed water at state 4 and 9 are needed to determine before by the given pressure condition and quality. Therefore, the pump work is determined as boundary work.

$$\dot{W}_{pump1} = \dot{m}_4 * v_4 * (p_5 - p_4) \tag{3.23}$$

$$\dot{W}_{pump2} = \dot{m}_9 * v_9 * (p_{10} - p_9) \tag{3.24}$$

The enthalpy at state 14 can be calculated via the energy balance equation 3.25.

$$\dot{m}_5 * h_5 + \dot{m}_{10} * h_{10} + \dot{m}_{13} * h_{13} = \dot{m}_{14} * h_{14} \tag{3.25}$$

To isolate h_{14} the equation can be written as

$$h_{14} = \frac{\dot{m}_5 * h_5 + \dot{m}_{10} * h_{10} + \dot{m}_{13} * h_{13}}{\dot{m}_{14}} \tag{3.26}$$

The overall energy efficiency is expressed by the total work output plus process heat supplied over the heat supplied; in addition, the alternative of combustion different fuels are also described in equation 3.27, 3.28, and 3.29.

$$\eta_{cogen,energy} = \frac{\dot{W}_{BPST} + \dot{W}_{CEST} - \dot{W}_{pump} + \dot{Q}_{process}}{\dot{m}_{fuel} * LHV_{bagasse}} \tag{3.27}$$

$$\eta_{cogen,energy} = \frac{\dot{W}_{BPST} + \dot{W}_{CEST} - \dot{W}_{pump} + \dot{Q}_{process}}{\dot{m}_{fuel} * LHV_{ricehusk}} \tag{3.28}$$

$$\eta_{cogen,energy} = \frac{\dot{W}_{BPST} + \dot{W}_{CEST} - \dot{W}_{pump} + \dot{Q}_{process}}{(0.5 * \dot{m}_{fuel} * LHV_{coal} + 0.5 * \dot{m}_{fuel} * LHV_{bagasse})} \tag{3.29}$$

3.4.2 Exergy analysis of cogeneration configuration 2

The second part of analysis is all about exergy aspect, the same equations are applied to the current configuration from the previous discussion. The approaches of finding flow exergy rate at each state are determined by equation 3.6 to 3.9, and the methods of evaluating the chemical exergy of fuel is described in equation 3.14 and 3.15. Moreover, the exergy destroyed within the plant can be calculated either by equation 3.10 which calculates based on the entropy generation through the each component, or the flow exergy difference between the components that is described in equation 3.11

As the result the overall exergy efficiency of different fuels can be written

$$\eta_{cogen,exergy} = \frac{\dot{W}_{BPST} + \dot{W}_{CEST} - \dot{W}_{pump} + \dot{E}x_{process}}{\dot{m}_{fuel} * \dot{E}x_{bagasse}^{chemical}} \tag{3.30}$$

$$\eta_{cogen,exergy} = \frac{\dot{W}_{BPST} + \dot{W}_{CEST} - \dot{W}_{pump} + \dot{E}x_{process}}{\dot{m}_{fuel} * \dot{E}x_{ricehusk}^{chemical}} \tag{3.31}$$

$$\eta_{cogen,exergy} = \frac{\dot{W}_{BPST} + \dot{W}_{CEST} - \dot{W}_{pump} + \dot{E}x_{process}}{(0.5 * \dot{m}_{fuel} * \dot{E}x_{coal}^{chemical} + 0.5 * \dot{m}_{fuel} * \dot{E}x_{bagasse}^{chemical})} \tag{3.32}$$

Note: The exergy transfer in the process heater is expressed as

$$\dot{E}x_{process} = \dot{m}_{coldwater} * (h_{12} - h_{11} - T_0 * (s_{12} - s_{11})) \quad (3.33)$$

3.5 Bagasse fuelled double back pressure steam turbine cogeneration plant (Configuration 3)

The last configuration is taken from the existing bagasse fuelled cogeneration plant and located in one of the largest sugar mills in Gujarat state in India [7]. According to the case study in this specific cogeneration plant, the analysis is only based on the energy aspect, but the energy analysis cannot sufficiently provide the details of the energy analysis within the plant and the use of energy. In addition, the evaluation of exergy flow is a proved technique to assess the energy system, and study of using exergy as evaluation tool is also performed by Rosen and Bulucea [46], exergy can clearly identify efficiency improvement and reductions in thermodynamic losses. For that reason, the sufficient analysis should include both energy and exergy, with the purpose of the best analytical results.

Table 3-4 List of Components

Label.	Components
A	Water Pump
B	Heat Exchanger
C	Boiler
D	Circular Pump
E	Deaerator
F	Pressure Relief Valve
G	Back Pressure Steam Turbine
H	Back Pressure Steam Turbine
I	Generator
J	Process Heater

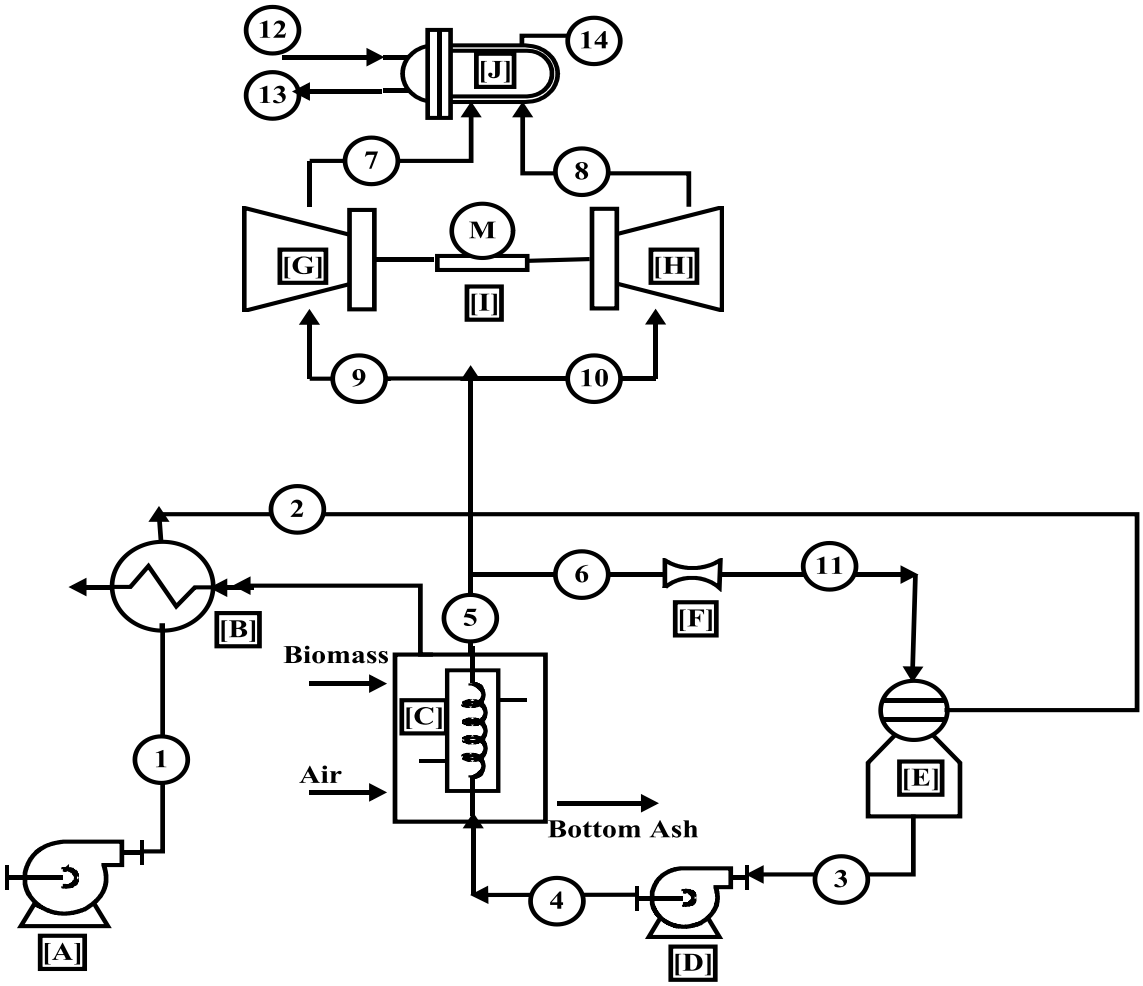

Figure 3.5 Double back pressure steam turbine cogeneration plant (Configuration 3) [7]

At first stage, the feed water supplies from ambient condition and passes through the pre-heater where the heat supplies from the exhausted gasses and usually carries a lower grade of thermal energy. At the meantime, preheating the feed water makes a meaning of waste heat recovery, because the feed water's temperature can rises about 10 °C. Then the heated feed water will flow to the deaerator to diminish content of oxygen because the existing of too much oxygen and other dissolved gasses in the feed water will significantly influence the system performance and reduces the efficiency.

After the oxygen, removal process has been done in the deaerator, the feed water pumps to the same pressure as the boiler's level. During the combustion process, the feed water starts picking up the heat to reach the superheated steam with high temperature and pressure. When the feed water turns into superheated steam, some of steam sends to the deaerator at state 6 for the necessary heating in deaerator, and the remaining steam will draw to the two back pressure steam turbines separately and thus the extracted steam will send to a single process heater to produce process heat. According the assumptions, the process heat is utilized to heat up cold water at the ambient condition in 50 kg/s, and the quality of the heating up steam is adjustable, because the lower flow rate can contribute on higher quality steam.

3.5.1 Energy analysis of cogeneration configuration 3

At first, the feed water pumps to 5.88bar at $45\,^{o}C$ initially at state 1 and then sends to the water pre-heater where the thermal energy is supplied from the exhausted gas, which comes from the boiler. As the result, the feed water heats up to $10\,^{o}C$ higher than the temperature at state 1.The amount of heat transfers to feed water in the pre-heater can be written.

$$\dot{Q}_{pre-heat} = \dot{m}_2 * h_2 - \dot{m}_1 * h_1 \tag{3.34}$$

The heated feed water then flows to the deaerator, which uses to remove the oxygen content and some other not dissolved gasses after passing through the pre-heater. The energy balance in the deaerator is written as equation 3.36 since here only involves internal energy change, and do not have any heat transfer between the system and ambient.

$$\dot{m}_2 * h_2 + \dot{m}_{11} * h_{11} = \dot{m}_3 * h_3 \tag{3.35}$$

After passing through the deaerator, the pure feed water sends to the boiler from state 4.In the heating process, the formation of superheated steam is achieved when the feed water passes through the boiler at state 5. The amount of heat transfers involving between boiler and steam can be written

$$\dot{Q}_{boiler} = \dot{m}_{fuel} * LHV_{fuel} * \eta_{combustion} \tag{3.36}$$

Part of steam extracts to state 6 from the outlet of boiler that is used in the deaerator via pressure relief valve, and the remaining steam leads to the two back pressure steam turbines to produce work output. The total work produce by turbines can be calculated as equation 3.37 and the same approach also apply to second back pressure steam turbine

$$\dot{W}_{BPST} = \dot{m}_9 * h_9 - \dot{m}_7 * h_7 \tag{3.37}$$

In order to evaluate the actual enthalpy and entropy, the theoretical value of enthalpy is calculated by the given pressure and isentropic turbine expansion at 2.5bar and $S_9 = S_7$ and thus the actual enthalpy value with 85% isentropic efficiency can be determined

$$h_{7Act} = h_9 - 0.85 * (h_9 - h_7) \tag{3.38}$$

$$h_{8Act} = h_8 - 0.85 * (h_{10} - h_8) \tag{3.39}$$

Finally, the lower quality steam extracts from both backpressure steam turbines will deliver to a single process heater. At the meantime the cold water flows into the process heater to pick up the thermal energy via heat exchange between extraction steam and cold water .The out flow of the cold water being heated up can be written as equation 3.40 with Cp from water substance

$$\dot{Q}_{process} = \dot{m}_{cold} * Cp * (T_{13} - T_{12}) \tag{3.40}$$

The overall energy efficiency is determined by 3.41 to 3.43, total work output from the tow steam turbines plus total thermal energy transfer to the cold water over the total fuel heating supply.

LHV indicates the lower heating value of fuel, in the present analysis there are three different LHV are considered such as bagasse, rice husk and coal

$$\eta_{cogen,energy} = \frac{\dot{W}_{BPST} + \dot{W}_{BPST} - \dot{W}_{pump} + \dot{Q}_{process}}{\dot{m}_{fuel} * LHV_{bagasse}} \tag{3.41}$$

$$\eta_{cogen,energy} = \frac{\dot{W}_{BPST} + \dot{W}_{BPST} - \dot{W}_{pump} + \dot{Q}_{process}}{\dot{m}_{fuel} * LHV_{ricehusk}} \tag{3.42}$$

$$\eta_{cogen,energy} = \frac{\dot{W}_{BPST} + \dot{W}_{BPST} - \dot{W}_{pump} + \dot{Q}_{process}}{(0.5 * \dot{m}_{fuel} * LHV_{coal} + 0.5 * \dot{m}_{fuel} * LHV_{bagasse})} \tag{3.43}$$

3.5.2 Exergy analysis of cogeneration configuration 3

All the analysis regarding on the energy aspects are presented above, and exergy analysis is going to discuss here. The exergy transfer by flow stream can be calculated from the equation 3.6 to 3.10, in particular, to the exergy transfer by heat, the conversion form is described in equation 3.9, and the exergy transfer by work can directly utilize in the analysis. When all the flow exergy is determined, the irreversibility can be calculated by either entropy generation in equation 3.10 or exergy flow difference in equation 3.11. As the result, the overall exergy efficiency of substitution of fuels carries out from equation 3.44 to 3.46.

$$\eta_{cogen,exergy} = \frac{\dot{W}_{BPST} + \dot{W}_{BPST} - \dot{W}_{pump} + \dot{E}x_{process}}{\dot{m}_{fuel} * \dot{E}x_{bagasse}^{chemical}} \tag{3.44}$$

$$\eta_{cogen,exergy} = \frac{\dot{W}_{BPST} + \dot{W}_{BPST} - \dot{W}_{pump} + \dot{E}x_{process}}{\dot{m}_{fuel} * \dot{E}x_{ricehusk}^{chemical}} \tag{3.45}$$

$$\eta_{cogen,exergy} = \frac{\dot{W}_{BPST} + \dot{W}_{BPST} - \dot{W}_{pump} + \dot{E}x_{process}}{(0.5 * \dot{m}_{fuel} * \dot{E}x_{coal}^{chemical} + 0.5 * \dot{m}_{fuel} * \dot{E}x_{bagasse}^{chemical})} \tag{3.46}$$

Note: The exergy transfers in the process heater is expressed as

$$\dot{E}x_{process} = \dot{m}_{coldwater} * (h_{13} - h_{12} - T_0 * (s_{13} - s_{12})) \tag{3.47}$$

To summarize, the completed descriptions of each configurations and methodologies of energy and exergy approaches are already conducted. However, chemical exergy of coal is going to present in the next section, because the methodology is distinct to the equation 3.14, which only describes the methods of finding the chemical exergy of biomass.

3.6 Chemical exergy evaluation of coal

The approaches can be classified into two steps, the first step is to calculate the chemical exergy of dry and ash free coal, and then substitute the value to equation 3.48 to find out the overall chemical exergy of coal with moisture content. The fuel is directly burned in the boiler in the present analysis and lack of drying process, thus the consideration of moisture is needed.

The chemical exergy of coal with moisture content can be found by the following equation, which is introduced from the thermal design and optimization by Bejan [37].

$$E_{coal}^{ch} = 0.7918 * E_{DAF}^{ch} + \frac{H_2O_{\text{mass fraction}}}{18.015} * E_{H_2O}^{ch} \tag{3.48}$$

Chemical exergy of DAF coal is written in the equation 3.49, which contains standard entropy and exergy value of the element composition in the coal as well as the higher heating value of coal.

$$\begin{aligned} E_{DAF}^{ch} = HHV_{DAF} - T_0 * [S_{DAF} + f * \bar{S}_{O_2} - g * \bar{S}_{CO_2} - h * \bar{S}_{H_2O} - i * \bar{S}_{SO_2} - j * \bar{S}_{N_2}] \\ + [g * \bar{e}_{CO_2}^{ch} + h * \bar{e}_{H_2O}^{ch} + i * \bar{e}_{SO_2}^{ch} + j * \bar{e}_{N_2}^{ch} - f * \bar{e}_{O_2}^{ch}] \end{aligned} \tag{3.49}$$

Equation 3.50 describes the combustion equation of coal, which is fired under the control volume boiler and bases on 1 kg of dry, and ash free coal.

$$(aC + bH + cO + dN + eS) + fO_2 \rightarrow gCO_2 + hH_2O + iSO_2 + jN_2 \tag{3.50}$$

The balanced coefficient (kmol/kg) of each element from the equation above is written as following

$$g = a \ , h = 0.5b \ , i = e \ , j = 0.5d \ , f = a + 0.25b + e - 0.5c \tag{3.51}$$

In order to compute the chemical exergy of DAF coal, there are two parameters need to determine before process to equation 3.49, include the higher heating value of dry and ash free coal (HHV_{DAF}) and absolute entropy of coal (S_{DAF}) . The value of HHV_{DAF} is calculated by the composition of DAF coal and each element presents the percentage of mass fraction, and the exact values can be found in the Table 3-7 under mass fraction DAF coal % .

$$HHV_{DAF} = [152.19H + 98.767] * [(C/3) + H - (O - S)/8] \tag{3.52}$$

The second parameter is the absolute entropy value kJ/kg.K in DAF coal and the alphabet a, b, c d, and e presents the mass fraction of each element respectively bases on the unit kmol/kg, and the exact value can be obtained from the Table 3-7

$$S_{DAF} = a*[37.1653 - 31.4767\exp(-0.564682*\frac{b}{a+d}) + 20.1145*\frac{c}{a+d} + 54.3111*\frac{d}{a+d} + 44.6712*\frac{e}{a+d}] \quad (3.53)$$

The required parameters are calculated from equation 3.52 and 3.53, and the last step is to substitute the result, which calculates via equation 3.49 into equation 3.48 to estimate the overall chemical exergy at the condition as received. The standard entropy and exergy value of the element of coal can be found in the Table 3-8

3.7 Effect of fuel types on energy and exergy efficiency

Fuel characteristic is another concern while consideration of improving the system performance, because different type of biomass fuels carry different calorific value. According to the energy and exergy, efficiency, which is discussed above, the efficiency, is mainly controlled by the amount of heat supplying to the plant based on the same power generation and process heat. In the present study the bagasse are taken from the following countries, Brazil, Thailand and India because these countries have massive production of agricultural wastes ,and therefore by cooperate the cogeneration plant with the mills could find a solution to the agricultural waste ,and could have a chance of having surplus power to sell for profits. The investigation will conduct in all three different configurations, in order to have results in consistency; all the operating conditions remain unchanged. The major change is going to substitute the different fuels

heating value and study the effect on energy and exergy efficiency. For instance in India, the alternative of different fuel describe in the configuration 2 and the same manners apply to the other two configurations

$$\eta_{cogen,energy} = \frac{\dot{W}_{BPST} + \dot{W}_{CEST} - \dot{W}_{pump} + \dot{Q}_{process}}{\dot{m}_{fuel} * LHV_{bagasse}^{India}} \tag{3.54}$$

$$\eta_{cogen,exergy} = \frac{\dot{W}_{turbine} - \dot{W}_{pump} + \dot{E}x_{process}}{\dot{m}_{fuel} * \dot{E}x_{India}^{chemical}} \tag{3.55}$$

In summary to this chapter, all the methodologies of evaluating energy and exergy efficiency, irreversibility are described here. All the equations describe in this chapter are going to work with the EES (Engineering Equation Solver) to perform the simulation.

The results of each configuration are presented in detail in the next chapter, besides the investigation of energy and exergy efficiency, the effect of changing operating conditions to the performance and irreversibility are performed as well. The steam quality is approved to be a major impact to the system performance from many practical studies and experiences. In addition, the need of studying in different bagasse is required because the performance of cogeneration mainly determines by the amount of heating input to the plant, and the results could help to differentiate the relation between fuel characteristic and the system performance. In some area, the cogeneration plant has to work with dual fuel in order to keep the plant operating for all the season. Especially, the bagasse is not sufficiently supplied, therefore the utilization of dual fuel should put into analysis as well.

3.8 Emissions from a natural gas fired cogeneration plant

Emissions always accompany with the power generation, and this topic has been discussed since the first day of burning fuels for electricity or heating. The previous studies focus on the firing of biomass as the fuel supplying to the cogeneration system, and because of the biomass, the emission problems have significant diminished. The combustion of biomass is a proven technology, the study of combustion and co-combustion with biomass is carried out by Nussbaumer [43]. The fundamental technology and the measurement of emission from the combustion are presented in this study. It a proven technology and widely applied In the size range from KW for household heating to several MW for district heating and up to more than one hundred MW for power station based on steam cycle. The driven force is in both cases the CO_2 neutrality of sustainable cultivated biomass or utilization of residue and waste [43].As we can see, the biomass is a proven technology and contributes a lot to the power generation.

Moreover, natural gas fired power generation is also another popular topic to discuss, and the CO_2 emission from the cogeneration system is going to study and by doing the analysis could help to understand the difference between coal fired power plant and natural gas fired cogeneration system numerically. The mythologies of evaluating the carbon dioxide are going to describe in this section and the approaches are taken from the "Second law of a natural gas-fired gas turbine cogeneration system" [42].In addition the configuration 2 is taken as an example to determine the emission from firing natural gas. The typical Natural gas combustion equation describes in equation 3.58. In order to simplify the combustion process pure methane is utilized into the analysis, and firing with 20 % excess air.

$$aCH_4 + b(O_2 + 3.76N_2) \rightarrow cH_2O + dCO_2 + eN_2 + fO_2 \quad (3.58)$$

The balanced coefficients are shown in 3.59 and the completed balance equation with 20 % excess air can be written as equation 3.60

$$\text{a=1, b=2*(Excess Air), c=2*a, d=a , e=3.76*b, f=b-d-}\frac{c}{2} \quad (3.59)$$

$$CH_4 + 2.4(O_2 + 3.76N_2) \rightarrow 2H_2O + CO_2 + 9.024N_2 + 0.4O_2 \quad (3.60)$$

After determine the chemical balance equation for natural gas combustion, the next step is to determine how much natural gas required in order heating up the steam to the required condition. In the reality, there is no 100 % energy conversion in the combustion, and therefore, the 15 % heat lost via boiler to the ambient is taken into the consideration. The quantity of natural gas is determined from the amount of heat transfers in the boiler to turns water into steam. The energy balance equation can be expressed as

$$\dot{m}_{in} * h_{in} + \dot{m}_{fuel} * LHV * (1-\alpha) = \dot{m}_{out} * h_{out} \quad (3.61)$$

Note: LHV of natural gas is taken at average value 50020 kJ/kg, [42]

The last step is to calculate the amount of carbon dioxide exhausts via the combustion process. One mole of carbon dioxide has 44 kg/mole, and convert the mass of natural gas kg/s into the molar based mole/s, and then reconsider the combustion equations because the coefficient of each compounds are changed .As the result ,the carbon dioxide can be estimated in equation 3.62

$$\dot{m}_{CO_2} = d * \text{Molar mass}_{CO_2} * \dot{m}_{fuel} \quad (3.62)$$

Table 3-5 Ultimate analysis (weight %) of diffenret biomass

Fuel	Carbon (C)	Oxygen (O)	Hydrogen (H)	Nitrogen (N)	Sulphur (S)	LHV (kJ/kg)	Ref*
Rice Husk	38.83	35.47	4.75	0.52	0.05	15000	[26] ,[16]
Bagasse	48.64	37.38	5.8	0.16	0.04	7650	[26]
Lignite Coal	51	23.8	4.1	0.4	0.16	19070	[29],[32]

Note: Dry and ash free basis

Table 3-6 Variation of calorific values from different countries

Country	Brazil	India	Thailand
Moisture %	46-50	43-50	45-50
LHV (kJ/kg)	6484	7650	7540
Ref*	[35]	[27]	[33]

Note: Direct combustion

Table 3-7 Element composition of coal [37]

Composition	Mass Fraction (Received) [%]	Mass Fraction DAF Coal [%]	(DAF) Coal [kmol/kg]
C	63.98	80.8	0.0673
H	4.51	5.7	0.0565
O	6.91	8.73	0.0055
N	1.26	1.59	0.0011
S	2.52	3.18	0.001
Ash	9.7		
Water	11.12		

Note: DAF (Dry and Ash Free) Coal

Table 3-8 Standard entropy and exergy values [37]

Substance	Standard Entropy [kJ/kmol.K)	Standard Exergy [MJ/kmol]
O_2	205.15	3.951
CO_2	213.79	14.176
H_2O	69.95	0.045
SO_2	248.09	301.939
N_2	191.6	0.639

Note: The standard value is evaluated based on 25 ^{o}C and P_0=1.013bar

CHAPTER 4: RESULTS SIMULATION AND DISCUSSION

The present simulations and results performed by the EES (Engineering Equation Solver), in order to confirm the results and programme accuracy, hand calculations for the individual configuration are taken to validate. The results are found to have small differences due to the different rounding from the calculated value. Furthermore, the estimated results also validate with the published paper and journals, and should be reliable and accurate in this thesis. This chapter essentially describes the results in energy and exergy efficiencies variation by changing operating conditions. Besides the efficiency investigations, the analysis is also going to investigate the influences of the work output and process heat from operating conditions though the parametric studies. The exergy destruction is another matter to be emphasised because the study of irreversibility could help to identify where the work or energy lost during the operation. Lastly, the effects of fuel types are conducted by firing the bagasse, rice husk, and dual fuel (50% bagasse and 50% coal).Moreover, the fuel characteristics will also carry out in the present study because the biomass could have various heating value and is mostly depending on provenance, which includes Brazil, India, and Thailand.

4.1 Results analysis of simple back pressure steam turbine cogeneration plant (Configuration 1)

The first simple cycle is used to ensure all the process and analyses are correct. Table 4-1 provides the details of steam condition at each state, and the operating conditions are taken from “Exergy analysis of cogeneration power plants in sugar industries” as a reference temperature and pressure. After the first attempt to study performance from the given conditions, and then the analysis can move to next level to vary the different steam

conditions and to understand how these changes are going to effect the production of energy. The simulation results are generating based on the assumptions (section 3.2) ,and the total steam flow rate at 14.45kg/s and the supplying fuel at 6.85kg/s.

Table 4-1 Operating conditions in simple back pressure steam turbine cogeneration plant [15]

Label	Temperature [T] (^{o}C)	Pressure [P] (bar)	Flow-Rate [$\dot{m}$] (kg/s)
1	340	21	14.45
2	232.8	8	1.4
3	129.8	2.5	13.05
4	127.4	2.5-Sat Liquid	13.05
5	127.4	21	13.05
6	117.7	21	14.45
7	25	1.013	1.4
8	25	1.013	20
9	99.97	1.013	20

The results of firing fixed amount bagasse in the configuration 1 are presented in the following tables and figures. At first, the analysis emphases on increasing the temperature from 340 ^{o}C to 520 ^{o}C in total work output and process heat at constant pressure 21bar. Next, the investigation is taken to study the influences of increasing pressure between 21bar and 81bar at temperature from 340 ^{o}C to 450 ^{o}C

4.1.1 Effect of increasing temperature or pressure on work output and process heat in simple back pressure steam turbine cogeneration plant

Table 4-2a represents the influences of total work output and process heat by changing the temperature at constant pressure. There is an increasing trend in producing process heat and work output by increasing the steam inlet temperature at constant pressure 21bar.

In comparison to the given condition at 340 ^{o}C and 21bar, the results reveal higher temperature with constant pressure provides more process heat and power when the temperature increases from 340 ^{o}C to 520 ^{o}C. The process heat and work output are increasing at average 390kW and 198.8kW respectively per every 20 ^{o}C due to increase enthalpy of the steam, and results in enhancing the overall performance. The highest work output improvement is found at 420 ^{o}C and 21bar.

Table 4- 2a Total work output and process heat variation of increasing temperature in simple back pressure steam turbine cogeneration plant. P=21 bar

Temperature [T]	Process Heat [Q]	Work Output [W]
(^{o}C)	**(kW)**	**(kW)**
340	28534	5369
360	28943	5558
380	29339	5755
400	29727	5956
420	30112	6158
440	30497	6359
460	30883	6560
480	31269	6760
500	31656	6959
520	32045	7158

In order to study the effect of increasing pressure, there different pressure level, 21bar, 41bar and 81bar are utilized in the analysis. The increment of temperature also considers in the range from 340 ^{o}C to 450 ^{o}C. According to the estimated values present in Table 4-2b, the highest production of the process heat is found increasing at 21bar, 360 ^{o}C. It also notices the pressure after 41bar should follow with temperature over 380 ^{o}C; otherwise,

the production of process heat is reduced. On the other hand, the overall work output is increasing by higher pressure and temperature.

Table 4-2b Total work output and process heat variation of selected temperature and pressure in simple back pressure steam turbine cogeneration plant

Temperature [T]	Pressure [P]	Process Heat [Q]	Work Output [W]
(°C)	**(bar)**	**(kW)**	**(kW)**
340	**21**	28534	5369
360	**21**	28943	5558
380	**41**	27697	7059
400	**41**	28114	7288
420	**81**	26654	8628
450	**81**	27308	9046

4.1.2 Effect of increasing temperature or pressure on energy and exergy efficiency in simple back pressure steam turbine cogeneration plant

Figure 4.1 represents the effect of increasing temperature from 340 °C to 520 °C on energy and exergy efficiencies at constant pressure 21bar. The linear relation of the energy and exergy efficiency is found, and can be projected the relation is proportional to the temperature increment. The increasing temperature leads to the energy and exergy efficiencies increase gradually when temperature increases every 20 °C. In particular, the energy efficiency is significantly improved from 64.65% to 74.76% when the temperature reaches to maximum at 520 °C, and the exergy efficiency also increases from 16.25% to 20.14%.To look at into detail, the average energy and exergy improvement is at 1.1% and 0.4 %.

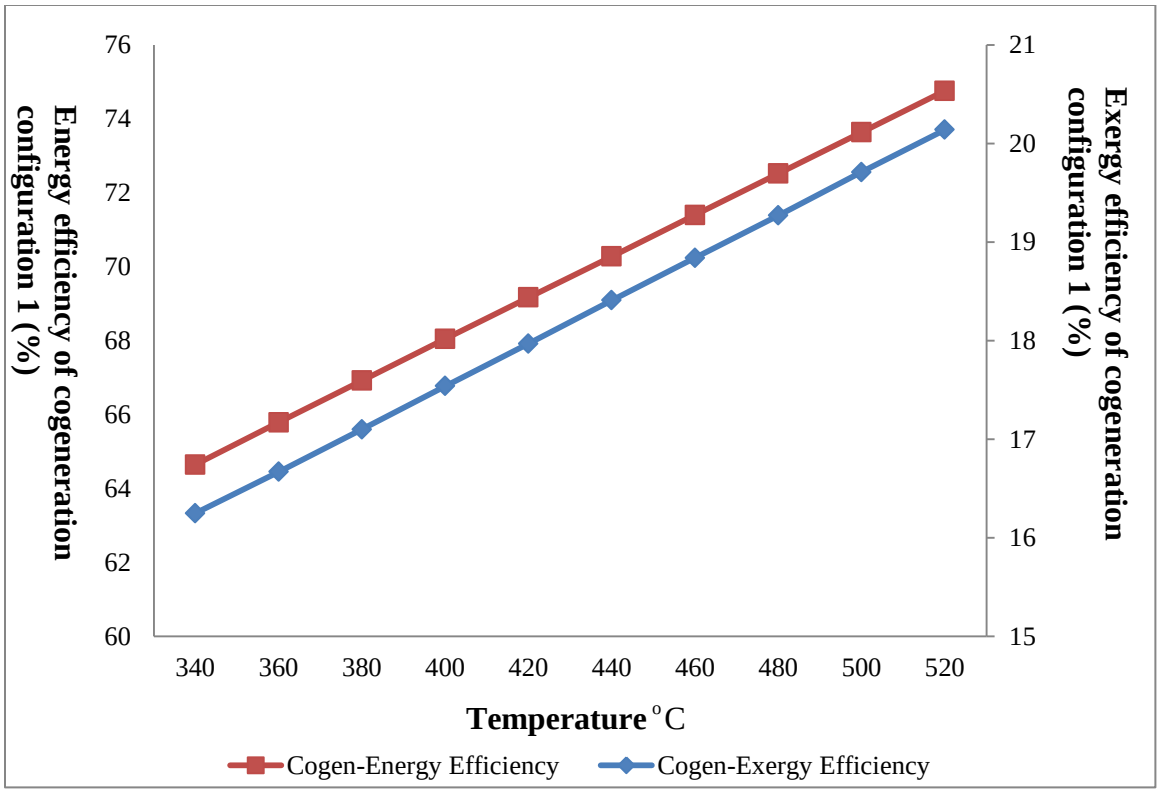

Figure 4.1 Energy and exergy efficiency variation of increasing temperature in back pressure steam turbine cogeneration plant, P=21 bar

The variation of energy and exergy efficiency at selected temperature and pressure is described in Table 4-3. According to the results, the effect of the pressure and temperature increasing leads to improve on both efficiencies. However, energy efficiency is found to reduce, when temperature and pressure locates at 420 °C and 81bar.The similar phenomenon can also refer to the lowest production of process heat in the Table 4-2b. In brief to overall cogeneration performance bases on firing bagasse, the energy and exergy efficiency improves from 64.65% to 74.76 % and 16.25% to 20.14% respectively when the steam inlet temperature is increased at constant pressure. In contrast to the effect of increasing both steam inlet temperature and pressure, both efficiencies increase from 64.65% to 69.32% and 16.25% to 21.73% corresponding to the energy and exergy

efficiency. The results also reveal a significant improvement in exergy efficiency when the pressure is over 81bar and 420 °C compared to the 21bar.

Table 4- 3 Energy and exergy efficiency variation of selected temperature and pressure in simple back pressure steam turbine cogeneration plant

Temperature (°C)	Pressure (bar)	Exergy Efficiency (%)	Energy Efficiency (%)
340	**21**	16.25	64.65
360	**21**	16.67	65.79
380	**41**	18.68	66.28
400	**41**	19.17	67.51
420	**81**	20.87	67.28
450	**81**	21.73	69.32

4.1.3 Exergy destruction in simple back pressure steam turbine cogeneration plant

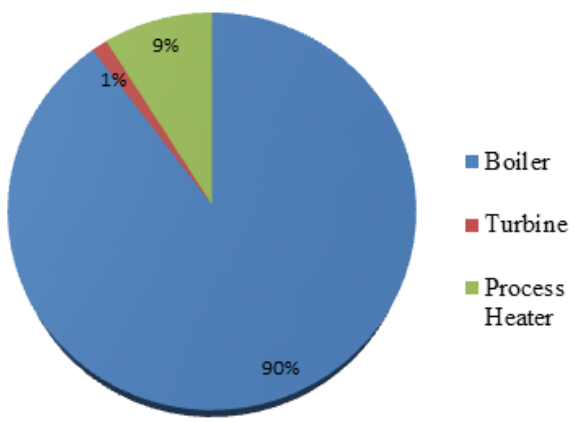

Figure 4.2 Exergy destruction in simple back pressure cogeneration plant

The maximum exergy destruction is estimated in the boiler when the temperature and pressure are at 340 °C and 21br and the same results apply to all the given operating conditions. Most of chemical reaction and largest temperature difference occurs here and the percentage of exergy destruction in each component is presented in the Figure 4.2. According to the calculations in Table 4-4a, the effect of changing operating conditions

reflects the exergy loss has been saved from wasting to ambient through the boiler, because the reduction of exergy destruction rate is found.

Table 4-4a Effects of increasing temperature on exergy destruction (irreversibility) in simple back pressure steam turbine cogeneration plant. P=21 bar

Temperature (°C)	Boiler (kW)	Process Heater (kW)	Turbine (kW)
340	48716	2100	707.9
360	48382	2130	724.6
380	48041	2169	732.5
400	47693	2217	735.8
420	47338	2272	737.3
440	46975	2336	738.4
460	46605	2407	739.3
480	46227	2485	739.9
500	45842	2571	740.2
520	45450	2663	740.5

The average improvement of irreversibility is found 362.9kW per every 20°C in boiler, and the quantity is increasing with higher temperature. However, the increment of exergy destruction occurs at 62.5kW and 3.5kW averagely corresponding to process heater and turbine. The trending in the process heater and turbine shows the undesirable influences when the temperature keeps increasing because the larger temperature difference causes more exergy loss during the operation. The results can also be noted, the increasing

extent of exergy destruction is found to be less in the turbine when the temperature increases gradually from 340 °C to 520 °C.

Table 4-4b Effect of selected temperature and pressure on exergy destruction (irreversibility) in simple back pressure steam turbine cogeneration plant

Temperature (°C)	Pressure (bar)	Boiler (kW)	Process Heater (kW)	Turbine (kW)
340	21	48716	2100	707.9
360	21	48382	2130	724.6
380	41	47045	2052	934.5
400	41	46668	2075	963
420	81	45563	1994	1144
450	81	44906	2030	1198

On the other hand, Table 4-4b describes the effect of selected temperature and pressure on the exergy destruction of each component. The significant improvement at about 3810 kW of the irreversibility in boiler is found, however the irreversibility reveals the increasing trend in the turbine to all the changing. In addition, process heater presents the various result in the exergy destruction, according to the estimated values, the lower pressure and temperature contribute on more irreversibility to the process heater. The increasing of irreversibility could cause by more production of process heat involving in the process heater at the lower pressure level.

4.1.4 Effect of fuel substitution on simple back pressure steam turbine cogeneration plant performance

The examination of fuel substitution is conducted in this section. Figure 4.3 presents the effect of increasing temperature and different fuels on energy and exergy efficiency. The steam inlet temperature is various from 340 °C to 520 °C at constant pressure 21bar.

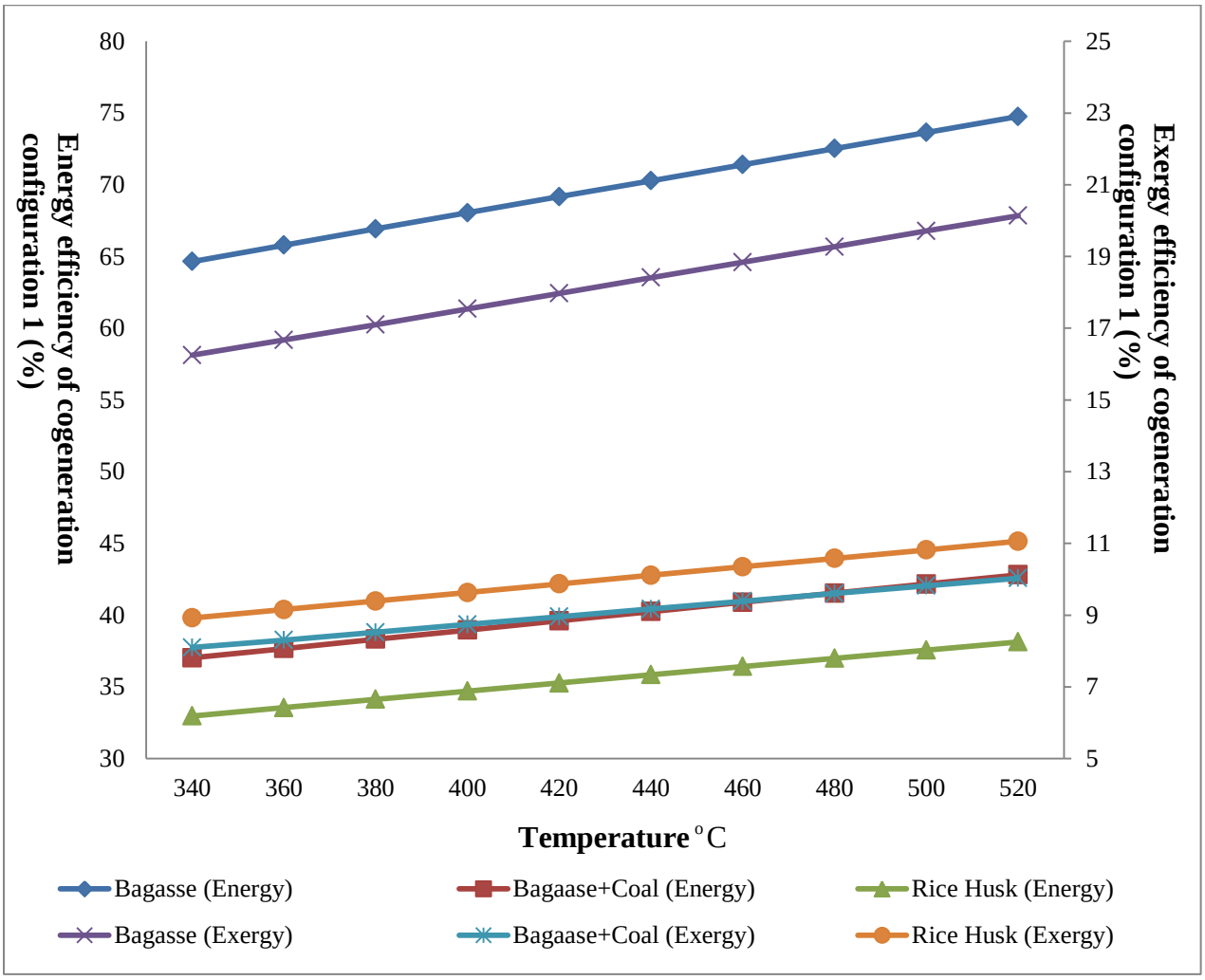

Figure 4.3 Energy and energy efficiency variation of increasing temperature on simple back pressure steam turbine cogeneration plant with three type fuels. P=21bar

The analysis is performed with three different supplying fuels. Regarding on the results, the energy efficiency improves at average 1.2% per every 20 °C in bagasse and 0.65%,

0.6% corresponding to dual fuels and rice husk. On the other hand, the extent of exergy improvement is only at average 0.4%, 0.2%, and 0.24% for bagasse, dual fuels and rice husk. Table 4-5a and Table 4-5b present the energy and exergy variation with effect of selected temperature and pressure and the three types of fuel are considered in the current analysis.

Table 4- 5a Energy efficiency variation of selected temperature and pressure in simple back pressure steam turbine cogeneration plant with three type fuels

Temperature (°C)	Pressure (bar)	Bagasse (%)	Bagasse + Coal (%)	Rice Husk (%)
340	**21**	64.65	37.02	32.97
360	**21**	65.79	37.67	33.55
380	**41**	66.28	37.95	33.8
400	**41**	67.51	38.66	34.43
420	**81**	67.28	38.52	34.31
450	**81**	69.32	39.7	35.36

Table 4- 5b Exergy efficiency variation of selected temperature and pressure in simple back pressure steam turbine cogeneration plant with three type fuels

Temperature (°C)	Pressure (bar)	Bagasse (%)	Bagasse + Coal (%)	Rice Husk (%)
340	**21**	16.25	8.095	8.921
360	**21**	16.67	8.305	9.153
380	**41**	18.68	9.309	10.26
400	**41**	19.17	9.553	10.53
420	**81**	20.87	10.4	11.46
450	**81**	21.73	10.82	11.93

According to the estimated values, the overall energy and exergy efficiencies increase with higher temperature and pressure of the steam conditions. It also notices bagasse fired cogeneration system has highest energy and exergy efficiency over the dual fuels and rice husk. In addition, the existing failure in energy efficiency is noticed at 420°C and 81bar

in the all three types fuel. Moreover, this specific scheme cogeneration system is suitable when the required process heat is relatively higher due to the power to heat ratio is at 0.1882

4.2 Result analysis of back pressure combined with condensing steam turbine cogeneration plant (Configuration 2)

Table 4- 6 Operating conditions in backpressure combined with condensing steam turbine cogeneration plant

Label	Temperature [T] (°C)	Pressure [P] (bar)	Flow-Rate [$\dot{m}$] (kg/s)
1	490	65	20
2	235.7	8	3
3	135.5	2.5	17
4	127.4	2.5-Sat Liquid	36.2
5	128	65	36.2
6	490	65	30
7	135.5	2.5	19.2
8	37.64	0.065	10.8
9	37.64	0.065-Sat Liquid	10.8
10	37.82	65	10.8
11	30	1.013	50
12	99.97	1.013	50
13	30	1.013	50
14	102.8	65	50

The details of operating conditions are presented in Table 4-6, the steam conditions are selected from studying typical cogeneration systems (Figure 3.3) and try to verify the vales through the computer programs and select reasonable and suitable values to apply to the current configuration. The simulation results are conducted based on the above operating conditions and the assumptions, which are made in section 3.2. The total steam

flows in the cycle at 50kg/s and the supplying fuel is at 23.5kg/s. The same process of the analysis continues from the previous configuration. First part of analysis emphases on the effects of steam conditions (temperature: 340 °C to 520 °C, and pressure: 65 bar) on the total work output and process heat generation. Next, the investigation is taken to conduct the influences of increasing pressure between 21bar and 81bar at selected temperature range from 340 °C to 450 °C

4.2.1 Effect of increasing temperature or pressure on work output and process heat in back pressure combined with condensing steam turbine cogeneration plant

Table 4-7a indicates the trend of increasing in total work output and process heat by increasing steam inlet temperature at constant pressure.

Table 4-7a Total work output and process heat variation of increasing temperature in back pressure combined with condensing steam turbine cogeneration plant P=65 bar

Temperature [T]	Process Heat [Q]	Work Output [W]
(°C)	**(kW)**	**(kW)**
340	70348	29435
360	71846	30405
380	73222	31364
400	74508	32322
420	75723	33286
440	76882	34260
460	77995	35247
480	79071	36248
500	80113	37264
520	81127	38296

According to the results, the amount of process heat and work output from process heater and the turbines increase averagely 1197.7kW and 984.56kW respectively per every 20

°C. It can also note the maximum improvement occurs where the temperature rises from 340°C to 360°C at 65bar, and the quantity is found at about 1498kW. In contrast to the influences on selected temperature and pressure, the consideration makes to investigate three pair of temperate and pressure combinations (temperature: 340°C to 450°C, and pressure: 21bar to 81bar).

The results reveal the contribution of improving in work output from increasing temperature and pressure simultaneously from Table 4-7b. The significant improvement in work output reveals to be influenced mostly from the pressure level, because work output gains more production as pressure increasing from 21bar to 81bar. Furthermore, the production of process heat is varying by changing the temperature and pressure. The highest production in process heat is notice at 360°C and 21bar, and the decreasing trend in process heat generation is observed when the pressure keeps increasing, even though the temperature increases at the same time. The result represents the higher pressure is not recommended when the consideration of maximize the quantity of process heat.

Table 4-7b Total work output and process heat variation of selected temperature and pressure in back pressure combined with condensing steam turbine cogeneration plant

Temperature [T]	**Pressure [P]**	**Process Heat [Q]**	**Work Output [W]**
(°C)	**(bar)**	**(kW)**	**(kW)**
340	**21**	79152	23398
360	**21**	80287	24123
380	**41**	76831	29051
400	**41**	77985	29910
420	**81**	73936	34258
450	**81**	75751	35804

4.2.2 Effect of increasing temperature or pressure on energy and exergy efficiency in back pressure combined with condensing steam turbine cogeneration plant

Figure 4.4 presents the influences in increasing temperature on energy and exergy efficiency with firing fixed amount of bagasse at constant pressure 65bar and the temperature increases from 340 °C to 520 °C.

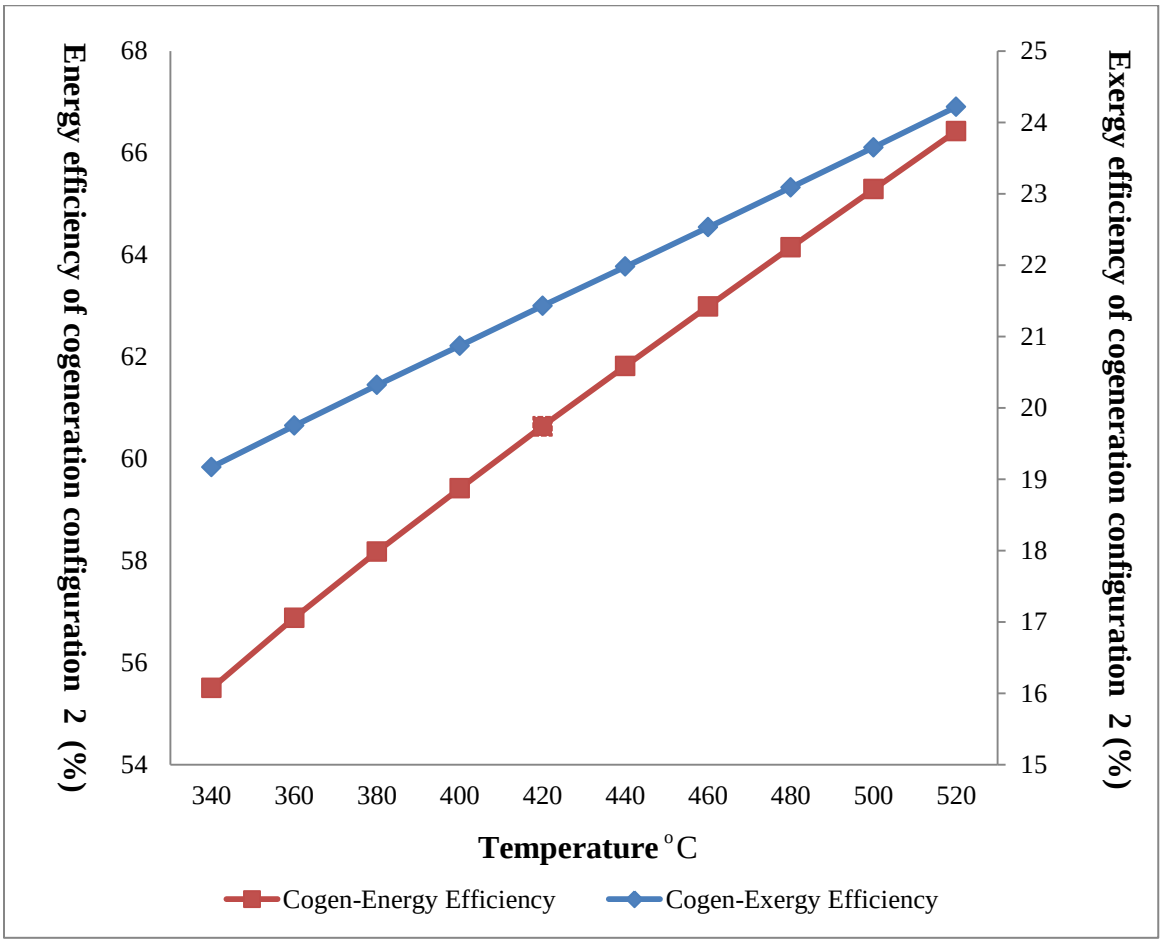

Figure 4.4 Energy and exergy efficiency variation of increasing temperature in back pressure combined with condensing steam turbine cogeneration plan. P=65 bar

The consequences of increasing temperature provide the advantage in both energy and exergy efficiencies. In particular, the energy efficiency is found to improve at maximum extent at 360 °C and 65bar. After that specific temperature 360 °C, the energy efficiency increase steadily at average 1.2% by every 20 °C.

On the other hand, the similar result also obtains from the current configuration in exergy efficiency; and is increasing steadily from 19.17% to 24.22% at average 0.56% increment. According to the investigation, the exergy efficiency improves from higher temperature because the extent of increased exergy efficiency is steadily rising. However, the increased rate in energy efficiency is decreasing. The results draw attention to the more energy could lose as increasing temperature difference in the steam inlet condition even though the overall performance is improved.

Table 4- 8 Energy and exergy efficiency variation with selected temperature and pressure in back pressure combined with condensing steam turbine cogeneration plant

Temperature (^{o}C)	Pressure (bar)	Exergy Efficiency (%)	Energy Efficiency (%)
340	21	17.14	57.04
360	21	17.58	58.08
380	41	19.56	58.90
400	41	20.06	60.02
420	81	21.72	60.18
450	81	22.6	62.05

The energy and exergy efficiency is presented in Table 4-8 at selected temperature and pressure. The influence of increasing pressure and temperature lead to improve on both efficiencies, however the extent of the improvement is lower than the effect of increasing temperature. Regarding on the estimated values, 22.6% and 62.05% are corresponding to exergy and energy efficiency. Both efficiencies are lower, compared to the consequence of increasing temperature to 520 ^{o}C at constant pressure.

In brief to overall cogeneration performance bases on firing bagasse, the energy and exergy efficiency improves from 55.5% to 66.43% and 19.17% to 24.22% respectively

when the steam inlet temperature increases at constant pressure. In contrast to the effect of increasing both steam inlet temperature and pressure, both efficiencies increase from 57.04% to 62.05% and 17.14% to 22.6%.The results also reveal a significant improvement in exergy efficiency when the pressure is over 81bar and 420 ^{o}C

4.2.3 Exergy destruction in back pressure combined with condensing steam turbine cogeneration plant

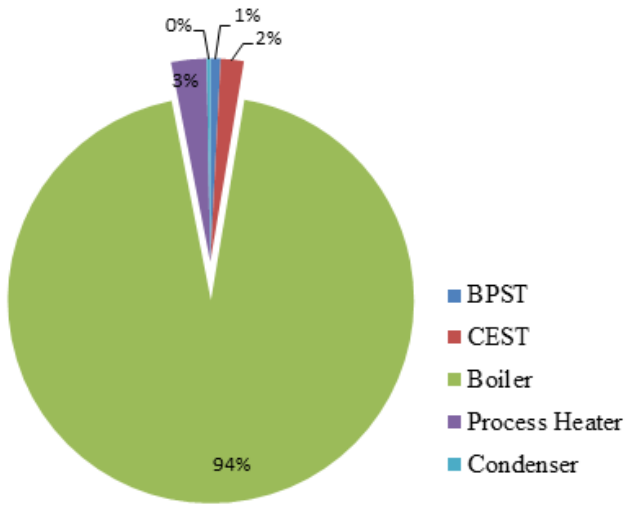

Figure 4.5 Exergy destruction in back pressure combined with condensing steam turbine cogeneration plant

Figure 4.5 points out the highest exergy destruction in the boiler and Table 4-9a, 4-9b also numerically describe the destruction rate for each individual component such as boiler, process heater, turbines, and condenser. For instance, the maximum exergy destruction is estimated in the boiler when the temperature and pressure are at 490 ^{o}C and 65bar. The same results apply to all the given operating condition, as the maximum destruction is located in the boiler. According to the calculation Table 4-9a, it can be noticed the present values are significant higher than previous configuration. This could due to the higher steam flows at 50 kg/s and more biomass supplies in the combustion

process. The parametric studies are aimed to investigate the influence of system performance from the different steam inlet conditions. At first, the analysis emphasis on effect of the temperature increment, it is observed the exergy destruction rate only reduced in the boiler, and the other components have gained more exergy destruction rate. The irreversibility has reduced in the boiler at approximately 584.22kW per every 20 ^{o}C

Table 4-9a Effect of increasing temperature on exergy destruction (irreversibility) in back pressure combined with condensing steam turbine cogeneration plant. CEST (Condensing steam turbine), BPST (Back pressure steam turbine) P=65 bar

Temperature (^{o}C)	Boiler (kW)	Condenser (kW)	Process Heater (kW)	CEST (kW)	BPST (kW)
340	195363	521.9	5192	3027	1310
360	194753	531.1	5275	3120	1356
380	194161	539.6	5352	3212	1402
400	193580	547.6	5423	3303	1448
420	193004	555.1	5491	3394	1494
440	192429	562.3	5555	3486	1538
460	191854	569.2	5617	3579	1582
480	191275	575.8	5681	3671	1625
500	190693	582.3	5754	3758	1662
520	190105	588.6	5850	3834	1690

Higher steam inlet temperature makes the meaning of more heat energy transfers to the steam and less been wasted to ambient from the fixed amount of supplying fuel. However, the temperature increment causes the larger temperature difference between the component's boundary temperature and ambient. The extent of exergy destruction

increases at 73.1kW, 89.66kW, 42.2kW and 7.41kW averagely corresponding to the process heater, CEST, BPST and condenser. In Particular, all the exergy destruction rates are found to be max when the temperature reaches to 520 ^{o}C. As stating in the figure 4.4, the increasing temperature improves both energy and exergy efficiencies because the more production of process heat and work output pay off the energy or exergy being wasted to ambient due to the increment of temperature difference. In addition, the next study of exergy destruction focuses on variation of steam inlet temperature and pressure at the same time. Table 4-9b represents the effect of selected temperature and pressure on the exergy destruction of each component. The results indicate increasing of exergy destruction continuously increase in both turbines and condenser, but the exergy destruction is reduced in process heater. The same phenomenon also represents in Table 4-7b, because less production of process heat lead to lower exergy destruction occurs in process heater.

Table 4-9b Effect of selected temperature and pressure on exergy destruction (irreversibility) in back pressure combined with condensing steam turbine cogeneration plant. CEST (condensing steam turbine), BPST (Back pressure steam turbine)

Temperature (^{o}C)	Pressure (bar)	Boiler (kW)	Condenser (kW)	Process heater (kW)	CEST (kW)	BPST (kW)
340	21	197125	574	5686	2545	947.4
360	21	196662	581	5769	2605	969.3
380	41	194811	561	5553	3029	1262
400	41	194290	568.1	5617	3111	1300
420	81	192760	544.5	5392	3470	1553
450	81	191852	555.7	5492	3615	1627

4.2.4 Effect of fuel substitution on back pressure combined with condensing steam turbine cogeneration plant performance

Bagasse, rice husk, and combination of coal and bagasse are utilized into the investigation responses from the fuel effects and operating conditions

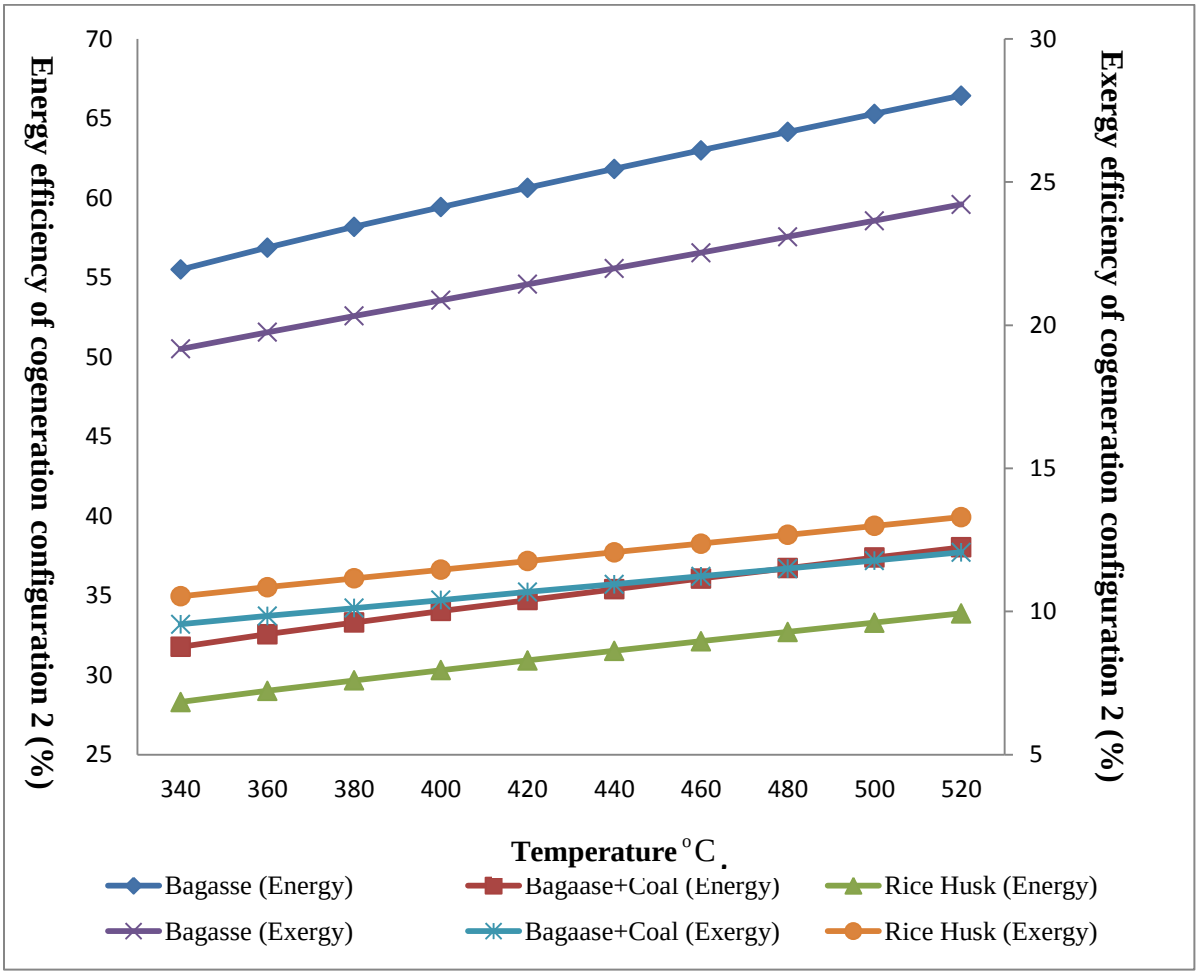

Figure 4.6 Energy and exergy efficiency variation of increasing temperature in back pressure combined with condensing steam turbine cogeneration plant with three type fuels. P=65 bar

Figure 4.6 describes the influences in increasing temperature on energy and exergy efficiency at constant pressure 65 bar. The higher temperature provides the advantage of increasing on both efficiencies in all three fuels. The energy efficiency increases 1.14%, 0.65%, and 0.58% averagely corresponding to bagasse, dual fuels, and rice husk. The

exergy efficiency improves at 0.57%, 0.29%, and 0.31% steadily by every 20 °C. The effect of different fuels reveals that bagasse achieves the highest efficiency in the energy utilization. The other two fuels are considers to work with higher steam flows rate because, rice husk and coal has higher heating values over the bagasse.

Table 4- 10a Energy efficiency variation of selected temperature and pressure in back pressure combined with condensing steam turbine cogeneration plant

Temperature (°C)	Pressure (bar)	Bagasse (%)	Bagasse + Coal (%)	Rice Husk (%)
340	21	57.04	32.66	29.09
360	21	58.08	33.26	29.62
380	41	58.90	33.72	30.04
400	41	60.02	34.37	30.61
420	81	60.18	34.46	30.69
450	81	62.05	35.53	31.65

Table 4- 10b Exergy efficiency variation of selected temperature and pressure in back pressure combined with condensing steam turbine cogeneration plant

Temperature (°C)	Pressure (bar)	Bagasse (%)	Bagasse + Coal (%)	Rice Husk (%)
340	21	17.14	8.541	8.412
360	21	17.58	8.758	9.651
380	41	19.56	9.746	10.74
400	41	20.06	9.994	11.01
420	81	21.72	10.82	11.93
450	81	22.60	11.26	12.41

Table 4.10a and Table 4.10b represent the overall energy and exergy efficiencies response to the selected temperature and pressure, and three types of fuel are considered in the current analysis. The energy efficiency reveals the highest efficiency which estimates in the bagasse fired cogeneration plant since the overall difference is about 5 % as increasing both temperature and pressure, and rest of fuels present about 2-3%

improvement. In particularly, the altering of pressure does not have significant contribution on the energy efficiency improvement, because there is only a slightly increment as pressure rising. For instance, there is only a small difference between 400 ^{o}C, 41bar and 420°C, 81bar. Moreover, the results also indicate the temperature is a primary influence in the same level of pressure to the efficiency.

The largest gain in the energy efficiency is achieved when the temperature reaches to maximum 520°C at 65 bar, and suggests the temperature level should start from 480 ^{o}C .It is obviously from the results which responses to the different operating conditions ,the increasing temperature increases the both production in power and process heating. Furthermore, the increment of the steam pressure could increase more capacity of work output from compensating less process heat generation, but the altering brings down the energy efficiency. Therefore ,the temperature is the primary factor to influence the overall performance ,and the pressure increment should follow by the temperature increment as well ,otherwise a little gains from the work output improvement by replacing HP/HT steam condition is worthless. By means of the power to heat ratio, this combined cogeneration system PHR is found to be 0.4618

4.3 Results analysis of double back pressure steam turbine cogeneration plant (Configuration 3)

Table 4-11 Operating conditions in double back pressure steam turbine cogeneration plant [7]

Label	Temperature [T] (°C)	Pressure [P] (bar)	Flow-Rate [ṁ] (kg/s)
1	45	5.884	16.94
2	55	5.884	16.94
3	90	0.981	17.5
4	110	34.32	17.5
5	375	31.382	17.5
6	375	31.382	0.556
7	127.4	2.5	8.056
8	127.4	2.5	8.056
9	375	31.382	8.056
10	375	31.382	8.056
11	250	0.68	0.556
12	25	1.013	30
13	99.97	1.013	30
14	127.4	2.5- Sat Liquid	16.11

The last configuration is taken from the cogeneration plant, which is currently in operation, the analysis start with the given operating conditions in Table 4-11. The first step is to analysis system responds to the existing operating conditions ,and then start the next analysis to investigation the influence of increasing steam inlet conditions (temperature: 340°C to 520°C at 31.381bar).In addition to change both temperature and pressure effects on increasing pressure between 21bar and 81bar at selected temperature 340°C to 450°C. The total steam flows in the cycle at 17.5kg/s and the supplying fuel is at 7.5kg/s. The results of firing bagasse in the configuration 3 are presented in the following tables and figures, and same analysis employs to the current configurations from the previous two configurations.

4.3.1 Effect of increasing temperature or pressure on double back pressure steam turbine cogeneration plant

Table 4-12a represents the influences of total work output and process heat by increasing temperature at constant pressure. The overall production of work output and process heat are enhanced as temperature increasing from 340 °C to 520 °C. The process heat and work output are found to increases 477.9kW and 260.4kW averagely per every 20 °C. In particular, the highest enhancement of process heat is found at 535kW in the process heater when temperature rises from 340 °C to 360 °C at 31.381 bar .Moreover, the highest gains 273kW from the work output improvement is found at 440 °C and 31.382bar

Table 4- 12a Total work output and process heat variation of increasing temperature in double back pressure steam turbine cogeneration plant. P=31.382 bar

Temperature [T]	**Process Heat [Q]**	**Work Turbine [W]**
(°C)	**(kW)**	**(kW)**
340	33989	7134
360	34524	7367
380	35037	7608
400	35530	7859
420	36008	8118
440	36473	8386
460	36929	8659
480	37383	8933
500	37836	9205
520	38290	9478

The significant improvement is found in the production of total workout put, compared to the effects of increasing steam condition (temperature: 340 °C to 450 °C, and pressure:

21bar to 81bar) in the Table 4-12b. The overall work output is estimated about 4073 kW increment as the temperature and pressure reaching 450 °C and 81bar. However, the quantity of process heat decreases because most of the energy has been attracted from the turbine. In addition, the results represents the lower pressure has advantage of producing more process heat and the increasing temperature directly contributes to better work output production.

Table 4-12b Total work output and process heat variation of selected temperature and pressure in double back pressure steam turbine cogeneration plant

Temperature [T]	**Pressure [P]**	**Process Heat [Q]**	**Work Turbine [W]**
(°C)	**(bar)**	**(kW)**	**(kW)**
340	**21**	35229	6283
360	**21**	35734	6503
380	**41**	34196	8149
400	**41**	34710	8410
420	**81**	32908	9884
450	**81**	33715	10356

4.3.2 Effect of increasing temperature or pressure on energy and exergy efficiency in double back pressure steam turbine cogeneration plant

Figure 4.7 describes the influences of temperature on energy and exergy efficiency in double back pressure steam turbine cogeneration system. The temperature considers in the range from 340 °C to 520 °C at 31.38bar. Energy and exergy efficiency improves proportionally as presenting in the above figure when the temperature increases. The extent of energy and exergy efficiency increases 1.3% and 0.5% averagely per every 20 °C

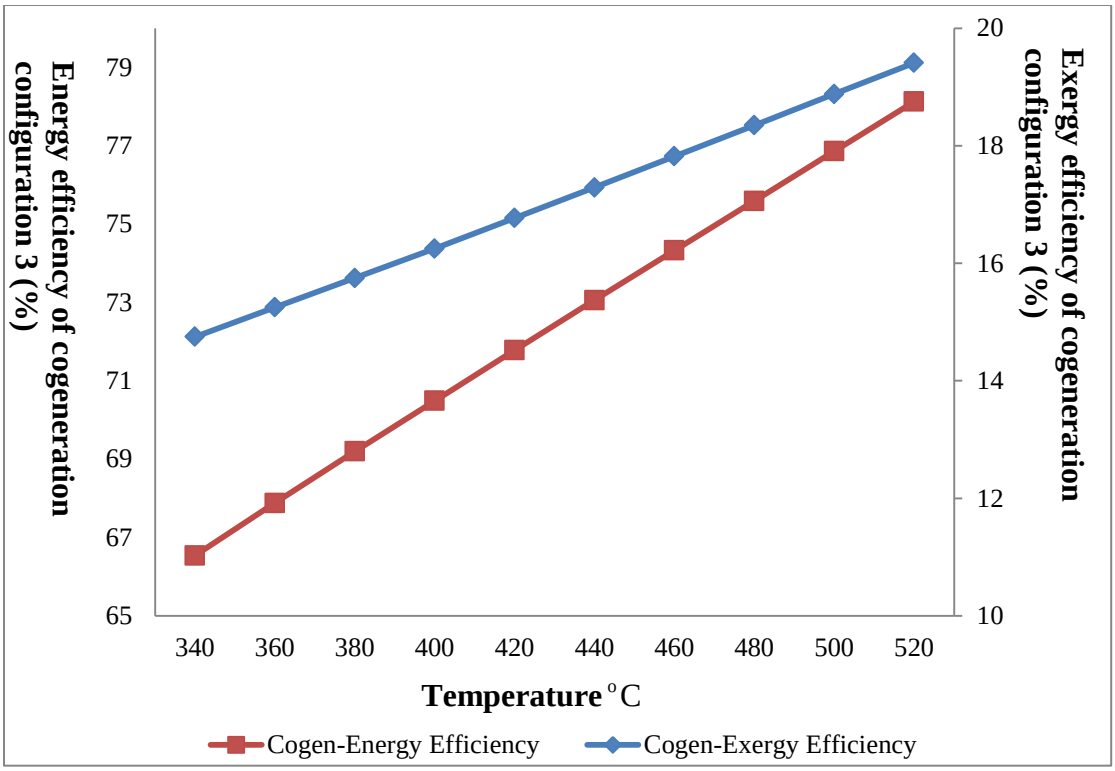

Figure 4.7 T Energy and exergy efficiency variations of increasing temperature in double back pressure steam turbine cogeneration plant. P=31.38 bar

Table 4-13 describes the variation of energy and exergy efficiency at selected temperature and pressure (Temperature: 340 °C to 450 °C, Pressure: 21bar to 81bar).The increasing of steam temperature and pressure directly enhance the cogeneration performance. However, the energy efficiency reveals inconsistent at 420 °C and 81bar since the efficiency is noticed to reduce and then back to increase at 450 °C. The same phenomenon is also noticed from the first configuration (simple backpressure cogeneration plant). In addition, the results show that pressure level is the essential influence to the exergy efficiency, because the exergy efficiency increases from 13.88% to 19.35% .There is no significant change in both efficiencies when the temperature increases in the same pressure level, and energy efficiency dose not manifest a notable improvement.

Table 4- 13 Energy and exergy efficiency variation of selected temperature and pressure in double back pressure steam turbine cogeneration plant

Temperature (^{o}C)	Pressure (bar)	Exergy Efficiency (%)	Energy Efficiency (%)
340	21	13.88	67.22
360	21	14.35	68.49
380	41	16.29	68.68
400	41	16.81	70.02
420	81	18.43	69.45
450	81	19.35	71.68

In brief to overall cogeneration performance bases on firing bagasse, the energy and exergy efficiency improves from 66.54% to 78.13% and 14.75% to 19.41% respectively when the steam inlet temperature increases at constant pressure. In contrast to the effect of increasing both steam inlet temperature and pressure, the efficiencies increase from 67.22% to 71.68 and 13.88% to 19.35%.

4.3.2 Exergy destruction in double back pressure steam turbine cogeneration plant

The maximum exergy destruction is estimated in the boiler when the temperature and pressure at 375 ^{o}C and 31.38 bar. The results can be applied to all the given operating conditions, as the maximum exergy destruction is located in the boiler. In addition, the boiler is major component to contribute on the total energy loss since the largest temperature difference is involved. Figure 4.8 represents the exergy destruction in the configuration 3, and carries out the same result of major energy losing from the boiler. Refer to Table 4-14a, higher temperature saves average 459.8kW in the exergy destruction, but the increasing exergy destruction causes by larger temperature differences in the turbines and process heater.

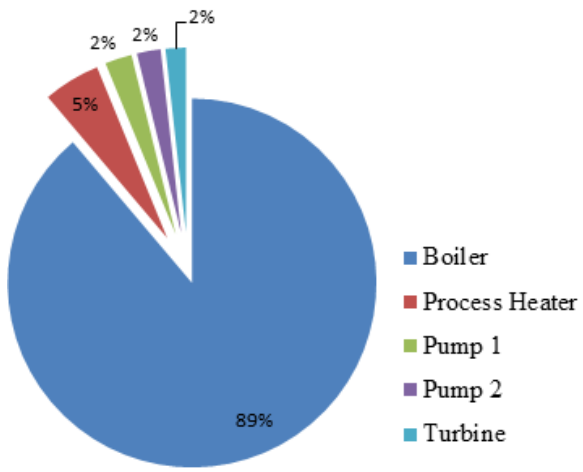

Figure 4.8 Exergy destruction in double back pressure steam turbine cogeneration plant

Therefore, it can be noted the increasing steam inlet temperature contributes on more energy loss to ambient via turbines and process heater. However the enhancement of overall performance is achieved, because the quantity of total work output and process heat produced compensates the exergy loses.

Table 4-14a Effects of increasing temperature on exergy destruction (irreversibility) in double back pressure steam turbine cogeneration plant. P=31.38 bar

Temperature (°C)	Boiler (kW)	Process Heater (kW)	Turbine (kW)
340	50402	2735	936.5
360	49966	2764	967.1
380	49527	2792	998.9
400	49082	2824	1026
420	48630	2866	1045
440	48172	2917	1054
460	47707	2977	1059
480	47233	3046	1060
500	46752	3123	1062
520	46264	3208	1063

In comparison to the results which describes in Table 4-14b with selected temperature and pressure on the exergy destruction of each component. The significant improvement at about 4584 kW of the irreversibility in boiler is found and process heat only experiences 84 kW improvements. However, the irreversibility reveals the increasing trend in the turbine to all the steam conditions and the results present in process heater are various. The lower pressure and temperature contributes on more irreversibility in the process heater. In particularly, the steam condition at 420 °C and 81 bar reveals the lowest irreversibility because the lowest production of process heat is observed in Table 4-12b

Table 4-14b Effect of selected temperature and pressure on exergy destruction (irreversibility) in double back pressure steam turbine cogeneration plant

Temperature (°C)	Pressure (bar)	Boiler (kW)	Process Heater (kW)	Turbine (kW)
340	21	51102	2804	823.1
360	21	50691	2841	843.2
380	41	49096	2746	1070
400	41	48633	2774	1104
420	81	47323	2675	1298
450	81	46518	2720	1360

4.3.3 Effect of fuel substitution on double back pressure steam turbine cogeneration plant performance

In this section, the analysis focuses on energy and exergy efficiency variation in three different fuels, and follows the same processes as previous configurations. Figure 4.9 presents the variation of energy and exergy efficiency by increasing temperature at constant pressure 31.38bar and three type fuels will be utilized into the analysis. The average energy improves at 1.3%, 0.73%, and 0.64% corresponding to bagasse, dual fuels,

and rice husk. The significant difference is estimated from the bagasse because the efficiency increases from 66.54% to 78.13%, and draws attention to convert energy more efficiently, in comparison to the other two types of fuels. In addition, the exergy efficiency is estimated as 0.53%, 0.26% and 0.29%, and the best performance is found when the bagasse fired is utilized. This result can also apply to the previous two configurations

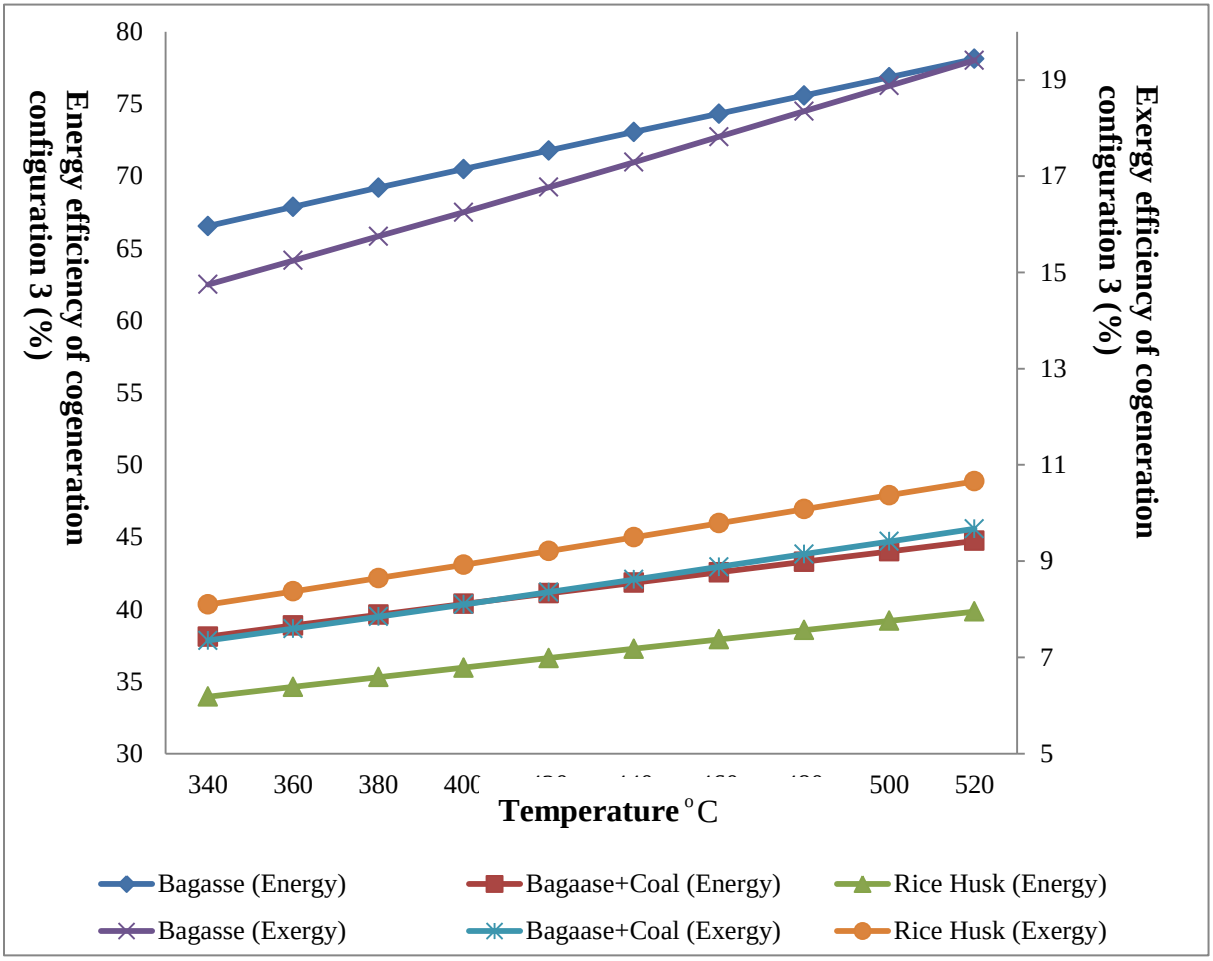

Figure 4.9 Energy and exergy efficiency variation of increasing temperature in double back pressure steam turbine cogeneration plant with three type fuels. P=31.38 bar

Energy and exergy efficiency analyses of selected temperature and pressure are presented in the following Table 4-15a and Table 4-15b.The results reveals the same influence in energy efficiency at 420 °C and 81bar from the previous discussion on simple back pressure steam turbine cogeneration plant. The failure in energy efficiency is noticed in all three type fuels, the efficiency decreases, and then back to increase. In addition, the exergy efficiency presents a steady increasing response to increase temperature and pressure, and the overall enhanced percentage at 5 % difference. Moreover, this specific scheme cogeneration system is suitable when the required process heat is relatively higher due to the power to heat ratio is at 0.1319.

Table 4- 15a Energy efficiency variation of selected temperature and pressure in double back pressure steam turbine cogeneration plant with three type fuels

Temperature (°C)	Pressure (bar)	Bagasse (%)	Bagasse + Coal (%)	Rice Husk (%)
340	21	67.22	37.02	32.97
360	21	68.49	37.67	33.55
380	41	68.68	39.32	35.02
400	41	70.02	40.1	35.71
420	81	69.45	39.77	35.42
450	81	71.68	41.05	36.56

Table 4- 15b Exergy efficiency variation of selected temperature and pressure in double back pressure steam turbine cogeneration plant with three type fuels

Temperature (°C)	Pressure (bar)	Bagasse (%)	Bagasse + Coal (%)	Rice Husk (%)
340	21	13.88	6.914	7.62
360	21	14.35	7.147	7.876
380	41	16.29	8.114	8.942
400	41	16.81	8.377	9.232
420	81	18.43	9.181	10.12
450	81	19.35	9.64	10.62

4.4 Comparison of three cogeneration configurations

- **Configuration 1**: Simple back pressure steam turbine cogeneration plant
- **Configuration 2**: Back pressure combined with condensing steam turbine cogeneration plant
- **Configuration 3** : Double back pressure steam turbine cogeneration plant

Table 4-2a, 4-7a, and 4-12a demonstrate the better performance in work output and process heat generation, when temperature is increasing at constant pressure in all three configurations. The quantity of increased process heat describes as following, 28534 kW to 32045 kW, 70348 kW to 81127 kW and 33989 kW to 38290 kW, corresponding to configurations 1, 2, and 3. In addition, the total work output is also estimated as 5369 kW to 7158 kW, 29435 kW to 38296 kW, and 7134 kW to 9478 kW. In this case, the higher temperature of steam inlet condition to the steam turbine can increase overall cogeneration systems performance, which could also refer to the Figure 4.1, 4.4 and 4.7. However, the side effect causes more energy and exergy loses during the plant's operation due to the increasing irreversibility in turbine because the temperature difference is increased. It can also draw attention to the heat insulation, which is an essential issue to emphasis from making use of higher degree of steam temperature. In comparison to the results from the 4-2b, 4-7b, and 4-12b, with the steam conditions change to increase pressure separately 21bar, 41bar, and 81bar at the selected temperature range from 340 °C to 450 °C. According to the estimated values, the result reveals the highest production of process heat is observed when the pressure at 21bar with higher temperature. On the other hand, the production of work output is noticed to be significant increased when temperature and pressure are both increasing at the same time.

Furthermore, the steam condition at 420 ^{o}C and 81bar shows inconsistent energy efficiency in the two configurations with operating only the backpressure steam turbine.

In comparison to all three configurations, configuration 3 is observed to have the highest energy efficiency 78.13% with the specific steam condition (31.38bar and 520 ^{o}C) and operates under two back pressure steam turbine. In addition, the highest exergy efficiency 24.22% is found in the configuration 2, which operates with back pressure and condensing steam turbines together when the bagasse is fired to produce the steam condition at 520 ^{o}C and 65bar. To conclude the energy and exergy efficiency with respect to the steam inlet conditions, the energy and exergy efficiency are improved from generating higher temperature at constant pressure of the boiler in all three configurations. For instance, energy efficiency is observed to have better performance when the temperature rises from 340 ^{o}C to 520 ^{o}C accompany with bagasse-fired boiler. According to the result, 64.65% to 74.76%, 55.5% to 66.43%, and 66.54% to 78.13% are corresponding to the configuration 1, 2 and 3, and the exergy efficiencies are estimated as 16.25% to 20.14%, 19.17% to 24.22%, and 14.75% to 19.14%. On the other hand, the energy and exergy efficiency response differently as steam conditions change to increase pressure separately 21bar, 41bar, and 81bar at the selected temperature range from 340 ^{o}C to 450 ^{o}C .Configuration 2 shows the better overall improvement in energy and exergy efficiency regarding on changing steam conditions. Configuration 1 and 3 also behave the similar effects from the selected temperature and pressure, and inconsistent of energy efficiency is observed at 420 ^{o}C and 81bar. Therefore, the results provide a suggestion that temperature should higher than 420 ^{o}C if the pressure level at 81bar is going to apply to the present configurations.

4.5 Validation of the present results

4.5.1 Results comparison to the relevant studies

The similar analysis of back pressure steam turbine cogeneration plant also conducted in the “Exergy analysis of cogeneration plants in sugar industries” [15], and the results are taken to validate the current results in the configuration 1. The overall energy efficiency is found to be 4 % difference with the same steam condition at 340 ^{o}C and 21 bar, and the exergy efficiency is observed only about 1 % difference. According to the energy, efficiency, the different isentropic efficiency employs to the analysis could be the major cause. In particular, the first configuration point out the steam inlet temperature to the turbine that is the essential parameter to control the work output and process heat generation. The investigation on the effect of temperature and pressure demonstrates the higher efficiency could be achieved in the simple back pressure steam turbine based cogeneration by increasing the steam inlet temperature. Furthermore, the study of the selected temperature and pressure also reveal higher pressure could provide advantage to the overall performance.

The comparable results also obtained from the study of exergy analysis, the improvement in energy and exergy efficiency is substantial over range of HP steam inlet conditions selected [15]. Therefore ,the temperature and pressure should have both increased ,in order to have the best performance, otherwise a little gains from the exergy improvement by replacing HP/HT steam condition is worthless. Configuration 2 leads to the same conclusion as the above discussion. It has approved that no doubt, the introduction of higher HP/HT steam conditions has more thermo-dynamic advantage as these steam inlet parameters yield better performance results [15].

The last configuration is taken from the sugar mill, which employs double back pressure steam turbine cogeneration plant in India. The estimated energy efficiency is found to be the highest in all three configurations at the maximum steam condition (Temperature 520 ^{o}C and 31.38bar). The similar result also observed by Kamate and Gangavati [15],they concluded the result of back pressure steam turbine cogeneration plant is the most efficient configuration from the point of integrating process steam demand and incidental power generation.

4.5.2 Overall efficiency and effect of increasing temperature or pressure validation with relevant studies

According to the simulation results, higher the steam inlet temperature provide more work output and process heat via the turbines and process heat. The result could validate from the fundamental of thermodynamic, which states the average temperature at which heat is transferred to steam can be increased without increasing the boiler pressure by superheating the steam to high temperature. Thus, both network and heat input increase as the result of superheating the steam to higher temperature [44].

The following analysis emphasises on the effect of increasing both temperature and pressure at the selected range. According to the results, the overall performance is enhanced on both energy and exergy efficiencies, and more work output can be obtained by reducing the steam inlet pressure in comparison to the effect of increasing steam temperature. To validate the result, the conclusion draws attention to the more efficient power generation can be achieved if sugar mills follow advanced cogeneration systems by employing higher pressure boiler and cum extraction turbine for process steam [45]. The following results in Table 4-16 are concluded in the “Exergy analysis of

cogeneration power plant in sugar industry [15]".The present analysis (Table 4-13) takes further step to investigate the results from changing temperature at the fixed pressure level. In the comparison of the both results, both efficiencies respond to be improved with respect to increase the steam operating conditions. Therefore, the presented simulation results in the parametric studies should be reliable and accurate

Table 4- 16 Energy and exergy efficiency of the steam turbine cogeneration plant [15]

Temperature (°C)	Pressure (bar)	Exergy Efficiency (%)	Energy Efficiency (%)
340	21	20.6	68.8
388	31	23.9	75.5
423	41	27.6	81.6
475	61	30.7	86.3
513	81	30.3	86.4

Table 4- 13 Energy and exergy efficiency variation with selected temperature and pressure in double back pressure steam turbine cogeneration plant

Temperature (°C)	Pressure (bar)	Exergy Efficiency (%)	Energy Efficiency (%)
340	21	13.88	67.22
360	21	14.35	68.49
380	41	16.29	68.68
400	41	16.81	70.02
420	81	18.43	69.45
450	81	19.35	71.68

4.6 Bagasse effect of energy and exergy efficiency

- **Configuration 1**:Simplae back pressure steam turbine with steam inlet conditions at 340 °C and 21bar
- **Configuration 2**: Back pressure combined with condensing type steam turbine with steam inlet condition at 490 °C and 65bar
- **Configuration 3** : Double back pressure steam turbine with steam inlet condition at 375 °C and 31.38bar

Table 4- 17 Energy and exergy efficiency variation of bagasse effect

	Configuration 1		**Configuration 2**		**Configuration 3**	
Efficiency %	Energy	Exergy	Energy	Exergy	Energy	Exergy
India	64.65	16.25	64.72	23.37	68.87	15.62
Thailand	65.59	16.45	65.66	23.66	69.88	15.82
Brazil	76.27	18.71	76.36	26.91	81.26	17.98

Heating value is another parameter to influence the cogeneration performance by determining how much heat input to the system. The values of different bagasse are presented in Table 3-5, and analysis is taken on fixed fuels flow rates, work output and process heat for each configuration. The overall results of replacing different bagasse are presented in Table 4-17.The highest energy efficiency 81.26% is found in configuration 3 when the bagasse transports from Brazil. In contrary, the lowest energy efficiency is estimated in configuration 1 as the bagasse supplying from India. Furthermore, the highest exergy efficiency 26.91 % obtains from the configuration 2 and the bagasse also supplies from Brazil. The results also reveal the use of combine back pressure and condensing steam turbine has advantage over the only using of back pressure steam turbine. According to the energy and exergy efficiency, configuration 2 responds to be the best configuration to be considered, in addition, the current analysis also indicates the bagasse from Brazil provides the highest efficiency to operate with the present cogeneration configurations

CHAPTER 5: CONCLUSION

This chapter summarizes the principal findings and the contributions from the present work. The examinations of energy and exergy of three biomass based cogeneration configurations are performed. In addition, the present work investigates the cogeneration systems performance from changing operating conditions, such as steam temperature, steam pressure and the fuels characteristics. At the end provides some recommendations for the future work.

5.1 Principal Contributions

- To summarize all three configurations, steam inlet temperature to the turbine is found to be the primary influence to determine the energy and exergy efficiency. The increase pressure is a potential solution to achieve more work output to meet the high power demand, and more profits can be obtained from selling the surplus power as well. In addition, the performance improves to be better by increasing the steam inlet temperature rather than the pressure. Temperature increment can directly improve the system performance by enhancing the steam quality with higher enthalpy and entropy formation. However, the increase pressure also provides the advantages of increasing the work output to compensate the less process heat production, and thus exergy efficiency is improved but the production of process heat is reduced.
- The major exergy destruction occurs in the boiler and process heater, where the increase irreversibility primarily contributes from the augmented of the temperature difference. According to the evaluated values present in Table 4-4a, 4-4b, 4-9a, 4-9b, and 4-14a, 4-14b.The decreasing trend of irreversibility is found to operate with the

higher temperature or pressure in the boiler because high temperature or pressure has meaning of more efficient in the combustion process and less thermal energy being wasted to ambient. In comparison to the effect of selected temperature and pressure (temperature: 340 ^{o}C to 450 ^{o}C, and pressure: 21bar and 81bar). The irreversibility is found to diminish in the boiler and process heater, but the increase irreversibility is observed in the turbine since most of the thermal energy is extracted in the turbine.

- Higher steam temperature could increase both energy and exergy efficiencies by enhancing the quantity of thermal energy from the steam, and contributes more thermal energy delivering to the turbines and process heater, and thus the improved performance is observed. In the consideration of energy and exergy lost. The evaluation of efficiency improvement and the extent of the energy lost are required. Otherwise, it would not be beneficial to increase the temperature with contributing on more irreversibility in the other components.
- Higher steam pressure provides more work output by reducing the quantity of process heat since the higher steam pressure expands through the turbine and thus the expanded steam would only have lower enthalpy and entropy. For that reason, the overall energy efficiency is reduced, but the performance is enhanced by generating more work output. The similar result also reflects from the increasing of exergy efficiency with respect to increase steam pressure.
- In order to study the effect of fuel characteristics, bagasse, rice husk, and the dual fuels (50% bagasse and 50% coal), are employed in the analysis in the fixed production of power and process heat. Bagasse is found to have better performance

in the energy conservation in all the configurations. The rice husk and dual fuels are recommended to operate with higher steam flow rate because these two fuels contain higher LHV, and therefore more thermal energy can transmit to the steam. According to the estimated values, the rich husk and dual fuels have similar performance, which only has approximately 2% difference in its energy and exergy efficiencies.

- Natural gas is another potential energy resource to compare with the coal in power generation due to its clean firing and less emissions. In the present work, the second cogeneration configuration is used to evaluate the emissions from the natural gas fired. According to the average number of carbon dioxide emission indicates, for every ton of fossil fuels burned, at least three quarters of a tone of carbon is released as CO_2 .It has been found that 0.8-0.9 kg/kWh CO_2 is emitted in India power plants [48]. The average emission is estimated at 0.3 kg/kWh for the given steam condition at 490 ^{o}C and 65 bar in the back pressure combined with condensing steam turbine cogeneration plant,. The estimated emission shows notable improvement of utilizing natural gas as supplying fuel to the average CO_2 emission from firing fossil fuel power plant. Therefore, natural gas could be a potential energy resource to utilize as reducing the emission matters.

5.2 Conclusions

The main conclusions can draw from the present work as follows.

- The back pressure steam turbine is found to be the most efficient configuration from the point of integrating process steam demand and incidental power generation. According to the results, configuration 1 shows its potential to meet the energy

demands simultaneously at 74.76% and 20.14% corresponding to its energy and exergy efficiency.

- Configuration 2 shows the highest potential to employ sufficiently regarding on the highest exergy efficiency over the other configurations that also presents the meaning of energy utilization more efficient from the energy input to the system. In addition, the flexibility is one of the most important advantages because the easy adjustment between the two turbines can apply to the fluctuated energy demands.
- To summarize the principal findings, higher the steam inlet condition could significantly reduce the irreversibility in the boiler, but the additional energy and exergy lost in the turbines and process heaters. Therefore, the necessity of investigating operating condition is required; otherwise, it makes no meaning of replacing HP/HT steam boiler.
- Obviously, carbon dioxide will produce from the combustion of biomass; however, the way of carbon dioxide releases to surrounding is not going to add additional CO_2 into the atmosphere. As the experimental study stating, through non-conventional fuels like biomass, hydro, solar, etc. can replace coal based power generations to an extent, they are expensive to establish and operate on one hand while their net life CO_2 emissions are negligible or zero on the other hand, which provides them superior position above fossil fuel like coal [48].

5.3 Recommendations

The present results and major findings in this thesis demonstrate the influences of different operating conditions in three cogeneration configurations and the

recommendations are made when needs of utilizing the results for future work and developments

- The results and findings are going to assist when the considerations need to be made for selecting operating conditions in biomass based cogeneration plant and provide suggestions regarding on the judgment of generating how much power and process heat at different steam inlet temperature and pressure.
- The present work will help companies or industries to select which type of biomass fuels or biomass based cogeneration systems would be the best option for them to perform optimal performance.
- Regarding on the types of fuels on cogeneration performance, the present investigation points out natural gas firing cogeneration systems could be a good choice for the future improvement and development .The emissions are found to reduce significantly compared to the conventional coal fired power generation.

REFERENCES

[1] Head of Publications Service, "Greenhouse emission". Internal Energy , OECO, 1999.Last visited January 8, 2012.

[2] Cogeneration Technology, "World's first commercial power plant was cogeneration plant". http://cogeneration.net/thomas-edisons-cogen-plant/ .Last visited January 8, 2012.

[3] Thermal Energy Equipment, "Cogeneration energy efficiency guide for industry in Asia". http://www.energyefficiencyasia.org. Last visited November 8, 2011

[4] N. Thilak Raj, S. Iniyan, Ranko Goic, "A review of renewable energy based cogeneration technologies". Renewable and Sustainable Energy Reviews, 15 (8) October 2011, pg. 3640-3648

[5] M. A. Rosen, "Reductions in energy use and environmental emissions achievable with utility-based cogeneration Simplified illustrations for Ontario". Applied Energy, 1998 61(3), pp163-174

[6] S. M. Smouse, G. E. Staats, S.N. Rao, Richard Goldman, David Hess, "Promotion of biomass cogeneration with power export in the Indian sugar industry". Fuel Processing Technology 1998, 54, pp. 227-247.

[7] Devki Energy Consultancy, Ltd. "Best practice manual cogeneration". India 2006. http://www.energymanagertraining.com. Last visited January 20, 2012.

[8] A. John, S. Martin, "Co-generation application considerations". 2009. http://site.ge-energy.com/prod_serv/products/tech_docs/en/downloads/GER3430G.pdf, Last visited December 8, 2011

[9] Power Generation Handbook, "Digital engineering library". McGraw -Hill 2004. http://www.digitalengineeringlibrary.com . Last visited November 8, 2011

[10] Self-Energy, "Combined heat and power (CHP) technology fact sheet" http://www.selfenergy.co.uk/decentralisedenergygeneration/cogeneration. Last visited October 24, 2011

[11] T. McNish, A. Jacobson, D. M .Kammen, A. Gopal. R. Deshmukh, "Sweet carbon: An analysis of sugar industry carbon market opportunities under the clean development mechanism". Energy Policy 2009 37(12), pp. 5459-5468.

[12] M. K. Chauhan, Varun, S.Kumar, Samar, "Life cycle assessment of sugar industry: A review". Renewable and Sustainable Energy Reviews 2011, 15(7), pp. 3445-3453.

[13] A.F McCulloch, “Review of bagasse fuel quality trends and of trent boiler efficiency test”.http://www.sasta.co.za/wpcontent/uploads/Proceedings/1950s/1953_Mcculloch_A%20Review%20Of%20Bagasse.pdf. Last visited Feb 20, 2012.

[14] M. P Sharma, J. D. Sharma, “Bagasse based co-generation system for Indian sugar mills”. Renewable Energy 1999 16(1–4), pp. 1011-1014.

[15] S. C. Kamate, P. B.Gangavati, “Exergy analysis of cogeneration power plants in sugar industries”. Applied Thermal Engineering 2009, 29 (5-6), pp. 1187-1194

[16] M. A.Mujeebu; M. Z.Abdullah, S.Ashok,“Husk-fueled steam turbine cogeneration for a rice mill with power export—A case study energy sources”. Part A: Recovery, Utilization, and Environmental Effects 2011, 33 (8), pp. 724-734

[17] Branch, UNEP, “Technical study report on biomass fired fluidized bed combustion boiler technology”. http://www.uneptie.org/energy . Last visited December 8, 2011

[18] J. H. Sosa, S. A. Nebra, “First and second law to analyze the performance of bagasse boilers”. International Journal of Thermodynamics 2011 14(2) pp. 51-58.

[19] IEA, “CO_2 emission from Fuel Combustion 1971-2007”. International Energy Agency 2009, Paris, France.

[20] Jayen,Veerapen, Milou ,Beerepoot,“Co-generation and renewables solution for low carbon energy future” International Energy Agency

[21] World Coal Association, “Cogeneration achieving energy saving”. Ecoal 2011, 74, http://www.worldcoal.org/resources/ecoal/ecoal-current-issue/cogeneration-achieving-energy-savings/ Last visited Feb 25. 2012.

[22] A Roubaud, R. Rothlisberger, D. Favrat, “Lean-burn cogeneration biogas engine with un-scavenged combustion pre-chamber: Comparison with natural gas”. International Journal of Thermodynamics 2002. 5(4), pp.169-175

[23] Thermal Energy Equipment Cogeneration, “Energy efficiency guide for industry in Asia”. http://www.energyefficiencyasia.org. Last visited Feb 11 2012.

[24] J .Wang, Y. Dai, L. Gao,"Exergy analyses and parametric optimizations for different cogeneration power plants in cement industry". Applied Energy 2009 86 (6), pp. 941-948.

[25] T.J. Kotas. The exergy methods of thermal plant analysis. Butterworth Publisher Stoneham. United State, 1985.

[26] T.R. Miles, L.L. Baxter, R.W. Bryers, B.M. Jenkins, L.L. Oden, "Alkali deposits found in biomass power plants: a preliminary investigation of their extent and nature". National Renewable Energy Laboratory.1995.http://www.trmiles.com/alkali/alkali.htm Last visited Feb 11 2012.

[27] S. C Kamate, P. B. Gangavati, "Energy and exergy analysis of a 44-MW bagasse-based cogeneration plant in India" . Cogeneration & Distributed Generation Journal 2010 25(1), pp. 35-51.

[28] M.Kanoglu, I. Dincer, "Performance assessment of cogeneration plants" Energy Conversion and Management 2009 50(1), pp.76-81.

[29] S. V. Vassilev, C. G. Vassilev,"A new approach for the combined chemical and mineral classification of the Inorganic matter in coal 1 chemical and mineral Classification Systems" .Fuel 2009, 88(3), pp. 235-245.

[30] M. M El-Wakil, "Power plant technology". Professor of Mechanical and Nuclear Engineering University of Wisconsin .The McGraw-Hill 1984

[31] B .Gadde, C. Menke, R. Wassmann, "Rice straw as a renewable energy source in India, Thailand, and the Philippines: Overall potential and limitations for energy contribution and greenhouse gas mitigation". Biomass and Bioenergy 2009, 33(11), pp. 1532-1546.

[32] Mehmood, Shoaib, "Energy and exergy analysis of biomass co-firing in pulverized coal power generation". 2011 http://hdl.handle.net/10155/152 Last visited March11. 2012.

[33] Y. Wakamura"Utilization of bagasse energy in Thailand"Mitigation and Adaptation Strategies for Global Change 2003 8(3),pp. 253-260

[34] Jingjing, Li; Xing, Zhuang; DeLaquil, Pat; Larson, Eric D.,"Biomass energy in China and its potential". Energy for Sustainable Development 2001, 5, pp. 66-80

[35] L.A.B. Cortez , E. O. Gomez,"A method for exergy analysis of sugarcane bagasse boilers". Brazilian Journal of Chemical Engineering 1998 15 (1)

[36]P. McKendry, "Energy production from biomass (part 1): overview of biomass". Bio resource Technology 2002, 83, pp. 37-46.

[37] A Bejan, G. Tsatsaronis, M. Moran, "Thermal design and optimization". John Wiley & Sons Inc. 1996

[38] IEA, "Electricity generation by fuel". http://www.iea.org/stats/index.asp. Last visited April 4 2012

[39] F. Sebastián, J. Royo, M. Gomez , "Co-firing versus biomass-fired power plants: GHG (Greenhouse Gases) emissions savings comparison by means of LCA (Life Cycle Assessment) methodology". 2011 Energy 36(4), pp. 2029-2037.

[40] International Energy Agency, "Biomass for power generation and CHP" http://www.iea.org/techno/essentials3.pdf. Last visited April 4 2012

[41]S. Bilgen, K. Kaygusuz, "Second law (Exergy) analysis of cogeneration system". Energy Sources, Part (A) 2008, 30, pp. 1267-1280

[42] B. V. Reddy, Cliff Butcher, "Second law of a natural gas-fired gas turbine cogeneration system". International Journal of Energy Research 2009 33, pp.728-736

[43] T. Nussbaumer, "Combustion and co-combustion of biomass fundamentals, Technologies, and Primary Measures for Emission Reduction". Energy & Fuels 2003, 17, pp. 1510-1521.

[44]Y.A Gengel and M. A., "Thermodynamics: An Engineering approach 5th". M.C.-Graw-Hill 2005.

[45] Premalatha, M. Priya, S Shanmuga, et al, "Efficient Cogeneration scheme for sugar industry" .Journal of Science & Industrial Research 2008 , 67,pp. 239-242.

[46] M A. Rosen, Cornelia Aida Bulucea, "Using exergy to understand and improve the efficiency of electrical power technology". Entropy 2009, 11, pp. 820-835

[47] Canova A et al, "Emission characterization and evaluation of natural gas-fueled cogeneration micro turbines and internal combustion engines". Energy Conversion and Management 2008, 49 (10), pp. 2900-2909

[48] Shiv Pratap Raghuvanshi, Avinash Chandra, Ashok Kumar Raghav, "Carbon dioxide emissions from coal based power generation in India". Energy Conversion & Management 2006, 47, pp. 427-441

Appendix: Program Code and Simulation Data

Simple back pressure steam turbine (Configuration 1)

Table 6- 1 Process heat and work output generation, energy and exergy variation of the increasing temperature at constant pressure in simple back pressure steam turbine

P=21 bar			Energy Efficiency (%)			Exergy Efficiency (%)		
Temperature (°C)	**Process Heat (kW)**	**Work Output (kW)**	**Bagasse**	**Bagasse + Coal**	**Rice Husk**	**Bagasse**	**Bagasse + Coal**	**Rice Husk**
340	28534	5369	64.65	37.02	32.97	16.25	8.095	8.921
360	28943	5558	65.79	37.67	33.55	16.67	8.305	9.153
380	29339	5755	66.92	38.32	34.13	17.1	8.521	9.39
400	29727	5956	68.05	38.96	34.7	17.54	8.738	9.629
420	30112	6158	69.17	39.6	35.27	17.97	8.955	9.869
440	30497	6359	70.28	40.25	35.85	18.41	9.172	10.11
460	30883	6560	71.4	40.89	36.42	18.84	9.388	10.35
480	31269	6760	72.52	41.53	36.99	19.27	9.603	10.58
500	31656	6959	73.64	42.17	37.56	19.71	9.819	10.82
520	32045	7158	74.76	42.81	38.13	20.14	10.03	11.06

Table 6- 2 Process heat and work output generation, energy and exergy variation of selected temperature and pressure in simple back pressure steam turbine

Temperature	Pressure	Process Heat	Work Output	Energy Efficiency (%)			Exergy Efficiency (%)		
(°C)	(bar)	(kW)	(kW)	Bagasse	Bagasse + Coal	Rice Husk	Bagasse	Bagasse + Coal	Rice Husk
340	**21**	28534	5369	64.65	37.02	32.97	16.25	8.095	8.921
360	**21**	28943	5558	65.79	37.67	33.55	16.67	8.305	9.153
380	**41**	27697	7059	66.28	37.95	33.8	18.68	9.309	10.26
400	**41**	28114	7288	67.51	38.66	34.43	19.17	9.553	10.53
420	**81**	26654	8628	67.28	38.52	34.31	20.87	10.4	11.46
450	**81**	27308	9046	69.32	39.7	35.36	21.73	10.82	11.93

Back pressure combined with condensing steam turbine cogeneration plant (Configuration 2)

Table 6- 3 Process heat and work output generation ,energy and exergy variation of the increasing temperature at constant pressure in back pressure combined with condensing steam turbine cogeneration plant

P=65 bar			Energy Efficiency (%)			Exergy Efficiency (%)		
Temperature (°C)	**Process Heat (kW)**	**Work Output (kW)**	**Bagasse**	**Bagasse + Coal**	**Rice Husk**	**Bagasse**	**Bagasse + Coal**	**Rice Husk**
340	70348	29435	55.5	31.78	28.31	19.17	9.553	10.53
360	71846	30405	56.88	32.57	29.01	19.75	9.842	10.85
380	73222	31364	58.18	33.31	29.67	20.32	10.12	11.16
400	74508	32322	59.42	34.03	30.31	20.87	10.4	11.46
420	75723	33286	60.64	34.72	30.92	21.43	10.68	11.76
440	76882	34260	61.82	35.4	31.53	21.98	10.95	12.07
460	77995	35247	62.99	36.07	32.13	22.53	11.23	12.37
480	79071	36248	64.15	36.73	32.71	23.09	11.5	12.68
500	80113	37264	65.29	37.39	33.3	23.65	11.78	12.99
520	81127	38296	66.43	38.04	33.88	24.22	12.07	13.3

Table 6- 4 Process heat and work output generation ,energy and exergy variation of selected temperature and pressure in back pressure combined with condensing steam turbine cogeneration plant

Temperature	Pressure	Process Heat	Work Output	Energy Efficiency (%)			Exergy Efficiency (%)		
(°C)	(bar)	(kW)	(kW)	Bagasse	Bagasse + Coal	Rice Husk	Bagasse	Bagasse + Coal	Rice Husk
340	**21**	79152	23398	57.04	32.66	29.09	17.14	8.541	8.412
360	**21**	80287	24123	58.08	33.26	29.62	17.58	8.758	9.651
380	**41**	76831	29051	58.9	33.72	30.04	19.56	9.746	10.74
400	**41**	77985	29910	60.02	34.37	30.61	20.06	9.994	11.01
420	**81**	73936	34258	60.18	34.46	30.69	21.72	10.82	11.93
450	**81**	75751	35804	62.05	35.53	31.65	22.6	11.26	12.41

Double back pressure steam turbine cogeneration plant(Configuration 3)

Table 6- 5 Process heat and work output generation ,energy and exergy variation of the increasing temperature at constant pressure in double back pressure steam turbine cogeneration plant

P=31.38 bar			Energy Efficiency (%)			Exergy Efficiency (%)		
Temperature (°C)	**Process Heat (kW)**	**Work Output (kW)**	**Bagasse**	**Bagasse + Coal**	**Rice Husk**	**Bagasse**	**Bagasse + Coal**	**Rice Husk**
340	33989	7134	66.54	38.1	33.94	14.75	7.349	8.099
360	34524	7367	67.88	38.87	34.62	15.25	7.596	8.371
380	35037	7608	69.2	39.62	35.29	15.75	7.845	8.646
400	35530	7859	70.49	40.37	35.95	16.25	8.098	8.924
420	36008	8118	71.78	41.1	36.61	16.77	8.355	9.208
440	36473	8386	73.06	41.83	37.26	17.29	8.617	9.496
460	36929	8659	74.33	42.56	37.91	17.82	8.881	9.786
480	37383	8933	75.59	43.29	38.55	18.35	9.145	10.08
500	37836	9205	76.86	44.01	39.2	18.88	9.408	10.37
520	38290	9478	78.13	44.74	39.84	19.41	9.671	10.66

Table 6- 6 Process heat and work output generation ,energy and exergy variation of selected temperature and pressure in double back pressure steam turbine cogeneration plant

Temperature	Pressure	Process Heat	Work Output	Energy Efficiency (%)			Exergy Efficiency (%)		
(°C)	**(bar)**	**(kW)**	**(kW)**	Bagasse	Bagasse + Coal	Rice Husk	Bagasse	Bagasse + Coal	Rice Husk
340	**21**	35229	6283	67.22	37.02	32.97	13.88	6.914	7.62
360	**21**	35734	6503	68.49	37.67	33.55	14.35	7.147	7.876
380	**41**	34196	8149	68.68	39.32	35.02	16.29	8.114	8.942
400	**41**	34710	8410	70.02	40.1	35.71	16.81	8.377	9.232
420	**81**	32908	9884	69.45	39.77	35.42	18.43	9.181	10.12
450	**81**	33715	10356	71.68	41.05	36.56	19.35	9.64	10.62

EES Example of Simple Back Pressure Steam Turbine Configuration 2

```
// Bagasse-Fuelled Steam Turbine Cogeneration (Configuration 2) Code simulation
"Reference Condition"
T[0]=30 [C]
P[0]=101.31[Kpa]
h[0]=Enthalpy(Steam,T=T[0],P=P[0])
s[0]=Entropy(Steam,T=T[0],P=P[0])
EX_0=0
T_0=273+T[0]
//-----------------------------------------Energy Analysis-----------------------------------------------
"BPST Isentropic turbine efficiency 85% "
"State 1"
M_Steam=50                                  "Total steam flow rate"
T[1]=490[C]
P[1]=6500[Kpa]
M_1=0.4*M_Steam                             "40% of total steam flows to Back Pressure
Steam Turbine "
h[1]=Enthalpy(Steam,T=T[1],P=P[1])          "Determine enthalpy"
s[1]=Entropy(Steam,h=h[1],P=P[1])           "Determine entropy"
"State 2"
M_2=0.15*M_1                                "15 % extraction from BPST to centrifugal"
P[2]=800[Kpa]
s[2]=s[1]
h[2]=Enthalpy(Steam,P=P[2],s=s[2])          "Theoretical enthalpy "
h2_actual=h[1]-0.85*(h[1]-h[2])             "Determine Actual enthalpy with 85 % Turbine
efficiency "
s2_actual=Entropy(Steam,h=h2_actual,P=P[2])        "Determine Actual entropy with 85 %
Turbine efficiency "
T[2]=Temperature(Steam,h=h2_actual,s=s2_actual)    "Determine Temperature"
"State 3"
M_3=0.85*M_1                                "85 % extraction from BPST to process heater"
P[3]=250[Kpa]
s[3]=s[1]
```

```
h[3]=Enthalpy(Steam,P=P[3],s=s[3])                    "Theoretical enthalpy "

h3_actual=h[1]-0.85*(h[1]-h[3])                       "Determine Actual enthalpy with 85 %
Turbine efficiency "
s3_actual=Entropy(Steam,h=h3_actual,P=P[3])           "Determine Actual entropy with 85 %
Turbine efficiency "
T[3]=Temperature(Steam,h=h3_actual,s=s3_actual)       "Determine Temperature"

//--------------------------------Back pressure ST work output-----------------------------------------------
-
W_BPST=M_1*h[1]-M_2*h2_actual-M_3*h3_actual

"CEST Isentropic turbine efficiency 85%"

M_6=0.6*M_Steam                                       " 60% of total steam flow rate "
T[6]=T[1]                                             "Same as state 1"
P[6]=P[1]                                             "Same as state 1"
h[6]=Enthalpy(Steam,T=T[6],P=P[6])                    "Determine enthalpy"
s[6]=Entropy(Steam,T=T[6],P=P[6])                     "Determine entropy"

M_7=0.64*M_6                                          "64 % extraction from CEST to process heater"
P[7]=250[Kpa]
s[7]=s[6]
h[7]=Enthalpy(Steam,P=P[7],s=s[7])                    "Theoretical enthalpy "

h7_actual=h[6]-0.85*(h[6]-h[7])                       "Determine Actual enthalpy with 85 %
Turbine efficiency"
s7_actual=Entropy(Steam,h=h7_actual,P=P[7])           "Determine Actual entropy"
T[7]=Temperature(Steam,h=h7_actual,s=s7_actual)       "Determine Temperature"

M_8=0.36*M_6                                          "36 % extraction from CEST to condenser"
P[8]=6.5[Kpa]
s[8]=s[6]
h[8]=Enthalpy(Steam,P=P[8],s=s[8])                    "Theoretical enthalpy "
h8_actual=h[6]-0.85*(h[6]-h[8])                       "Determine Actual enthalpy with 85 %
Turbine efficiency"
s8_actual=Entropy(Steam,h=h8_actual,P=P[8])           "Determine Actual entropy"
```

```
T[8]=Temperature(Water,h=h8_actual,s=s8_actual)        "Determine Temperature"

"State 4"
M_4=M_3+M_7                                  "Total steam passes through process heater"
P[4]=250[Kpa]                                "Process heater pressure "
x[4]=0                                       "Saturated liquid"
h[4]=Enthalpy(Water,P=P[4],x=x[4])           "Determine enthalpy"
v[4]=Volume(Water,P=P[4],x=x[4])             "Determine specific volume"
s[4]=Entropy(Water,P=P[4],x=x[4])            "Determine entropy"
T[4]=Temperature(Water,P=P[4],h=h[4])        "Determine Temperature"

"State 5"
M_5=M_4
P[5]=6500[Kpa]
h[5]=h[4]+v[4]*(P[5]-P[4])                   "Determine enthalpy via boundary work"
s[5]=Entropy(Steam,h=h[5],P=P[5])            "Determine entropy"
T[5]=Temperature(Water,P=P[5],h=h[5])        "Determine temperature"

//-----------------------------------Condensing ST work output----------------------------------------

W_CEST=M_6*h[6]-M_7*h7_actual-M_8*h8_actual

"State 9"
M_9=M_8
P[9]=6.5[Kpa]
x[9]=0                                       "Saturated liquid"
h[9]=Enthalpy(Water,P=P[9],x=x[9])           "Determine enthalpy"
v[9]=Volume(Water,P=P[9],x=x[9])             "Determine specific volume"
s[9]=Entropy(Water,P=P[9],x=x[9])            "Determine entropy"
T[9]=Temperature(Water,h=h[9],s=s[9])        "Determine temperature"

"State 10"
M_10=M_9
P[10]=6500[Kpa]
h[10]=h[9]+v[9]*(P[10]-P[9])                 "Determine enthalpy via boundary work"
s[10]=Entropy(Water,h=h[10],P=P[10])         "Determine entropy"
T[10]=Temperature(Water,h=h[10],s=s[10])     "Determine temperature"
```

"Process The T boundary temperature is difficult to define that is really depend on the actual condition, so the assumption is made to heat up the water 50 kg from reference condition"

```
M_11=50[kg/s]                                   "cold water flows in"
T[11]=T[0]
P[11]=P[0]
h[11]=Enthalpy(Water,T=T[11],P=P[11])           "Determine enthalpy"
s[11]=Entropy(Water,P=P[11],T=T[11])            "Determine entropy"

Q_process=M_11*(h[12]-h[11])                    "Amount of heat transfer from hot steam to the
water then can define enthalpy outlet "

M_12=M_11
P[12]=P[0]                                      "No pressure change during the heating"
s[12]=Entropy(Steam,P=P[12],h=h[12])            "Determine entropy"
T[12]=Temperature(Steam,h=h[12],s=s[12])        "Determine temperature"
x[12]=Quality(Steam,P=P[12],h=h[12])            "Quality of steam"
"State 13"
M_13=M_2                                        "Make up water"
"Make up water at reference condition"
P[13]=101.3
T[13]=T[0]
s[13]=s[0]
h[13]=Enthalpy(Water,T=T[13],P=P[13])

"State 14"
M_14=M_Steam                                        "Total steam flows back to boiler"
P[14]=6500[Kpa]
h[14]=(M_13*h[13]+M_5*h[5]+M_10*h[10])/M_14         "Enthalpy at state 14 is found from
balance equation"
s[14]=Entropy(Water,h=h[14],P=P[14])                "Determine entropy"
T[14]=Temperature(Water,h=h[14],s=s[14])            "Determine temperature"

//---------------------------------Energy Analysis-----------------------------------------------

"Process Heat"
```

```
Q_process=M_3*h3_actual+M_7*h7_actual-M_4*h[4]

"Condenser"
Q_condenser=M_9*(h[8]-h[9])
__
"Pump1"
W_pump1=M_4*(h[5]-h[4])

"Pump2"
W_pump2=M_9*(h[10]-h[9])

//--------------------------------------Fuel supply Bagasse-----------------------------------------------------------

"Fule supply"
M_fuel=23.5                                                    "Mass flow rate of fuel"
//LHV=7650                                                     "Lower heating value of bagasse"
Q_supply_bagasse=M_fuel*LHV_bagasse
//-------------------------------------------Fuel Supply Rice Husk-----------------------------------------------
LHV_ricehusk=15000                                   "Lower Heating Value of rice husk"
Q_supply_ricehusk=(M_fuel*LHV_ricehusk)

//----------------------------------------Dual fuels ----------------------------------------------------------------
LHV_coal=19070                                                        "Lower Heating Value
of coal"
LHV_bagasse=7650                                                      "Lower Heating Value
of bagasse"
Q_supply_dual=(0.5*M_fuel*LHV_coal+0.5*M_fuel*LHV_bagasse)        "50% coal & 50%
bagasse "

//--------------------------------------First Law Efficiency-----------------------------------------------------------

Total_work=W_CEST+W_BPST-W_pump1-W_pump2
"Bagasse "
Efficiency_Thermal_Bagasse=(((W_CEST+W_BPST-W_pump1-
W_pump2)+Q_process)/Q_supply_bagasse)*100

"Rice Husk"
```

```
Efficiency_Thermal_Ricehusk=(((W_CEST+W_BPST-W_pump1-
W_pump2)+Q_process)/Q_supply_ricehusk)*100

"Dual Fuels"
Efficiency_Thermal_Dualfuels=(((W_CEST+W_BPST-W_pump1-
W_pump2)+Q_process)/Q_supply_dual)*100

//-----------------------------------------------Exergy Analysis-----------------------------------------------------------
----------

"Determine Flow Exergy (Steady Flow & Control volume),the kinetic and potential energy are
negligible in the analysis"

EX_1=M_1*((h[1]-h[0])-T_0*(s[1]-s[0]))
EX_2=M_2*((h2_actual-h[0])-T_0*(s2_actual-s[0]))
EX_3=M_3*((h3_actual-h[0])-T_0*(s3_actual-s[0]))
EX_4=M_4*((h[4]-h[0])-T_0*(s[4]-s[0]))
EX_5=M_5*((h[5]-h[0])-T_0*(s[5]-s[0]))
EX_6=M_6*((h[6]-h[0])-T_0*(s[6]-s[0]))
EX_7=M_7*((h7_actual-h[0])-T_0*(s7_actual-s[0]))
EX_8=M_8*((h8_actual-h[0])-T_0*(s8_actual-s[0]))
EX_9=M_9*((h[9]-h[0])-T_0*(s[9]-s[0]))
EX_10=M_10*((h[10]-h[0])-T_0*(s[10]-s[0]))
EX_11=M_11*((h[11]-h[0])-T_0*(s[11]-s[0]))
EX_12=M_12*((h[12]-h[0])-T_0*(s[12]-s[0]))
EX_13=0
EX_14=M_14*((h[14]-h[0])-T_0*(s[14]-s[0]))

//----------------------------------------Fuel Chemical Exergy-----------------------------------------------------
"Fuel Chemical Exergy biomass ultimate analysis "
c_b=0.4864                                  "Mass Fraction of carbon"
h_b=0.058                                   "Mass Fraction of hydrogen"
o_b=0.3738                                  "Mass Fraction of Oxygen"
n_b=0.0016                                  "Mass fraction of Nitrogen"

Moisture_sugar=0.5                                "Fuel moisture content"
h_fg_b=2442
```

```
Ratio_Dry_single=(1.0438+0.1882*(h_b/c_b)-0.2509*(1+0.7256*(h_b/c_b))+0.0383*(n_b/c_b))/(1-
0.3035*(o_b/c_b))
Chemical_exergy_bagasse=(LHV_bagasse+Moisture_sugar*h_fg_b)*Ratio_Dry_single

"Fuel Chemical Exergy rice husk  ultimate analysis "
c_r=0.3883                                  "Mass Fraction of carbon"
h_r=0.0475                                  "Mass Fraction of hydrogen"
o_r=0.3547                                  "Mass Fraction of Oxygen"
n_r=0.0052                                  "Mass fraction of Nitrogen"
Moisture_rice=0.0908                        "Fuel moisture content"
h_fg_r=2442

Ratio_Dry_r=(1.0438+0.1882*(h_r/c_r)-0.2509*(1+0.7256*(h_r/c_r))+0.0383*(n_r/c_r))/(1-
0.3035*(o_r/c_r))
Chemical_exergy_ricehusk=(LHV_ricehusk+Moisture_rice*h_fg_r)*Ratio_Dry_r

"Exergy Destruction through components"

Ex_destruction_boiler_bagasse=EX_14+M_fuel*Chemical_exergy_bagasse-EX_1
"Exergy Destruction of Boiler with bagasse"

Ex_destruction_boiler_ricehusk=EX_14+M_fuel*Chemical_exergy_ricehusk-EX_1
"Exergy Destruction of Boiler with rice husk"
_
Ex_destruction_boiler_dual=EX_14+(0.5*M_fuel*Chemical_exergy_bagasse)+(0.5*M_fuel*Ex_Co
al)-EX_1          "Exergy Destruction of Boiler with dual fuels"

Exergy_Destruction_BPST=EX_1-EX_2-EX_3-W_BPST

Exergy_Destruction_CEST=EX_6-EX_7-EX_8-W_CEST

Exergy_Destruction_Condenser=EX_8-EX_9

Exergy_Destruction_pump2=EX_4-EX_5+W_pump1

Exergy_Destruction_pump1=EX_9-EX_10+W_pump2
```

```
Exergy_Destruction_process=EX_3+EX_7-EX_4-EX_process

//----------------------------------------------------------------Exergy Efficiency-----------------------------------
--------
EX_process=50*(h[12]-h[11]-T_0*(s[12]-s[11]))

Exergy_Efficiency_bagasse= ((W_CEST+W_BPST-W_pump1-
W_pump2+Ex_process )/(M_fuel*Chemical_exergy_bagasse))*100

Exergy_Efficiency_ricehusk= ((W_CEST+W_BPST-W_pump1-
W_pump2+Ex_process )/(M_fuel*Chemical_exergy_ricehusk))*100

Ex_Coal=27680 "Chemical exergy of coal is computed at seperator EES file"

Exergy_Efficiency_dual= ((W_CEST+W_BPST-W_pump1-
W_pump2+Ex_process )/(0.5*M_fuel*Chemical_exergy_bagasse+0.5*M_fuel*Ex_Coal))*100
```