ANALYSIS AND TECHNIQUES FOR NON-INTRUSIVE APPLIANCE LOAD MONITORING

by

Sami Alshareef

B. Eng, Umm Al-Qura University, Saudi Arabia, 2009

A Thesis Submitted in Partial Fulfillment of the Requirements for the Degree of

Master of Applied Science

in the Graduate Academic Unit of Electrical and Computer Engineering

Supervisor: W. G. Morsi, Ph.D., P.Eng.

Department of Electrical and Computer Engineering

Faculty of Engineering and Applied Sciences

THE UNIVERSITY OF ONTARIO INSTITUTE OF TECHNOLOGY

November, 2014

Certificate of Approval

ABSTRACT

The increased public awareness of energy conservation and the demand for smart metering system have created interests in home energy monitoring. Load disaggregation using a single sensing point is considered a cost-effective way to sense individual appliance operation as opposed to using dedicated sensors for appliance monitoring. The aim of this thesis is to investigate the effectiveness of the analysis methods and techniques used in load disaggregation using a single point sensing. Time-frequency analysis methods such as Wavelet transforms are carefully examined and machine learning classifiers are used to develop the appropriate prediction models. The results have shown that the use of different Wavelet functions can significantly affect the classification accuracy. Among the four wavelets investigated in this thesis, two wavelets (Daubechies and Symlets) are able to provide the highest mean classification accuracy.

ACKNOWLEDGEMENTS

I would like to express my sincere gratitude to my thesis supervisor, Dr. Walid Morsi Ibrahim for the opportunity to work on this timely research topic in the promising field of non-intrusive monitoring for smart grid applications. I would like to thank him for his continuous guidance throughout my time enrolled at the University Of Ontario Institute of Technology (UOIT) as a Master's student.

Table of Contents

List of Tables

List of Figures

Nomenclature

P – Active Power

Q – Reactive Power

D – Distortion Power

S – Apparent Power

V – Voltage Root Mean Square

I – Current Root Mean Square

$x(t)$ – Continuous Time domain signal

$X(F)$ – Frequency Domain Signal

$x(n)$ – Discrete Time Domain Signal

P_1 – Active Power at the Fundamental Frequency Component (60 Hz)

Q_1 – Reactive Power at the Fundamental Frequency Component (60 Hz)

S_1 – Apparent Power at the Fundamental Frequency Component (60 Hz)

V_1 – Voltage Root Mean Square at the Fundamental Frequency Component (60 Hz)

I_1 – Current Root mean Square at the Fundamental Frequency Component (60 Hz)

θ_1 – Phase Displacement at the Fundamental Frequency Component (60 Hz)

RMS – Root Mean Square

$\emptyset$ – Scaling Function

φ – Wavelet Function

cA – Wavelet Approximation Coefficients

cD – Wavelet Detail Coefficients

h_o – Low Pass Wavelet Filter Coefficients

h_1 – High Pass Wavelet Filter Coefficients

$\widetilde{\emptyset}$ – Biorthogonal Scaling Function at the Decomposition Side

DB – Daubechies Wavelet Family Name

COIF – Coiflets Wavelet Family Name

SYM – Symlets Wavelet Family Name

BIOR – Biorthogonal Wavelet Family Name

$C(a,b)$ – Continuous Wavelet Transform Coefficients using Scale a and Time b

E_{cA} – Energy of Approximation Wavelet Coefficients

E_{cD} – Energy of Detail Wavelet Coefficients

X_{d} – sequence Difference

m – Classes to be detected

t – Decision Tree Node

Gini – Gini Index used to assess Node Impurities in Decision Tree

DT – Decision Tree Classifier

<,> – Inner Product

μ – Classification Accuracy

1. Introduction

1.1 Background

Energy consumption monitoring is considered a vital process for energy management in electric energy systems. The soaring gas prices and the environmental concerns of increased Green House Gases (GHGs) have raised the interests in energy consumption management in electric energy systems. Typical electric energy consumption meters measure the power consumed by all appliances in operation and then compute the energy consumed based on the time period during which these appliances are in operation. Since this method relies on computing the aggregated power consumption, the energy consumed by each appliance may not be accessible which limits the capability and the effectiveness of any energy management program.

In order to make the energy consumption of each appliance accessible, the power consumption at the meter level must be disaggregated by sensing individual appliance's operation using the signals sensed at the meter. Load disaggregation can benefit both consumers and electric utilities. On the consumers' side, load disaggregation can provide the consumers with energy information which will help them adapting their consumption behavior to Time of Use (TOU) rates and hence saving on their energy bills. This will help reducing individual consumers' consumption in an effective way. On the other hand, from the electric power utilities side, load disaggregation can be helpful in reducing the impact on the aging electricity grid by applying more controlling strategies to the identified large consumers based on their consumptions. Also, load disaggregation can be

used by electric power utilities for verification in complains. Finally, electric power utilities can use the collected data of load disaggregation to determine the accurate estimation for energy's excess. Therefore, the total annual cost for the generation will be reduced.

1.2 Problem Statement and Motivation

Power consumption monitoring can be applied either using multi-sensors to monitor the energy consumed by each appliance or using a single point sensing in which the aggregated power consumption of a group of appliances is measured. The former approach is not considered a cost-effective approach and hence there is a growing interests in single point sensing approach. The main disadvantage of using multi-sensors to monitor the energy consumption in residential subdivisions is being costly to be implemented and to be maintained. The use of multi-sensors for energy consumption monitoring is called intrusive monitoring because there is intrusion to the customer property to install these sensors.

On the other hand, load disaggregation using a single sensing point is considered cost-effective since only one meter (or energy monitor) is required which make the process cost-effective and easy to be installed. This technique is called nonintrusive monitoring. The objective of this thesis is to study and investigate the analysis methods and techniques used to detect individual appliance operation using single point sensing for non-intrusive load monitoring and load disaggregation in the residential sector. Figure 1.1 illustrates a sample system represented by a single-line diagram showing a single-

phase distribution transformer feeding M-load. The non-intrusive load monitoring is applied by using the point of common coupling (PCC) at which the M-loads are tied. The voltage and current data are collected at this point and used in the monitoring system.

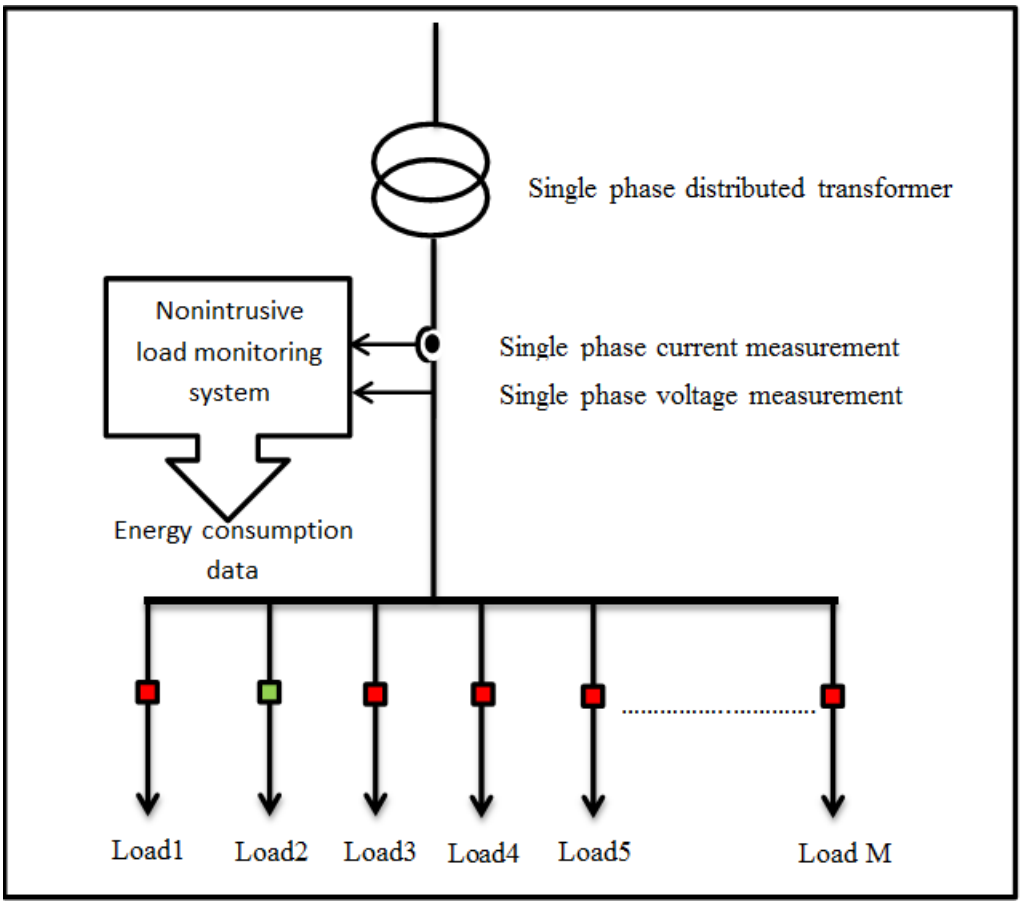

Fig. 1.1: Single phase nonintrusive monitoring system for residential load.

Load disaggregation can be achieved either using steady-state analysis methods or using transient methods. In steady state methods, the voltage and current signals are used to compute different power components such as active power, reactive power and apparent power which are then used to detect the individual appliance operation based on the power ratings. The main disadvantage of this approach is that most of the methods

using steady state analysis suffer delay in response to ensure that all transients die out. Moreover, most of the algorithms based on steady-state analysis fail to distinguish between appliances having almost same ratings. Also, using active and reactive power in load disaggregation is complicated because it needs to sample current and voltage waveforms synchronously to find the phase angle between them to calculate the reactive power consumption.

On the other hand, load disaggregation using transient analysis is considered more robust compared to steady-state analysis methods since it depends on finding power signatures for each appliance in operation using the information contained in transients,. Because the method uses the transients following the switching of loads once they come into operation, the issue of delay in response time is resolved. In order to extract the prominent features in transients, the information contained in time and frequency of the analysis signals must be carefully examined. Fourier transform is a well-known frequency analysis tool. However, since Fourier transform assumes that the signal to be analyzed is periodic (which is not the case in transients) the performance of Fourier degrades in transients and hence it is not the suitable tool for this type of analysis.

Time-frequency analysis tools such as wavelets may be used to perform such analysis however, several open ended questions must be addressed such as the choice of the sampling frequency, the shape of the basic function needed to best extract the hidden features in the analyzed signal and also the number of decomposition levels used to perform the analysis. Moreover, in order to ensure robust operation of the non-intrusive

load monitoring, a comprehensive testing under different power quality disturbances must be performed on the developed classification model.

1.3 Thesis Organization

This thesis consists of five chapters. Chapter 1 explains the need for load disaggregation and non-intrusive load monitoring followed by a problem statement targeting the two analysis methods used in non-intrusive load monitoring, i.e., steady-state and transients methods. The work motivation in this thesis is presented which basically touches on different analysis methods such as Fourier and Wavelet transform. The advantages and disadvantages of both analysis methods are highlighted, and finally, the contribution of this thesis is outlined.

Chapter 2 is dedicated to literature review on non-intrusive appliance load monitoring approaches. The analysis methods used in steady state and transients are briefly summarized. The advantages and the disadvantages arte highlighted. The research gaps in previous work are presented. The chapter concludes the literature review by a summary outlining the main salient points regarding extracting features in transients using wavelets.

Chapter 3 outlines the main characteristics of four wavelet families (e.g., Daubechies, Symlets, Coiflets and Biorthogonal). Also, this chapter presents the strength of wavelet transform and weaknesses of Fourier transform when used in transient signal feature

extraction hence justifying the need for utilizing Wavelet transform to extract hidden features. The Mathematical formulation of the proposed wavelet-based energy feature extraction approach is presented, and finally, the basics of Decision Tree classifier are presented.

Chapter 4 is devoted to simulation results and analysis. The chapter starts by providing a brief description of test system used which consist of four loads including battery charger, fluorescent lamp, personal computer and an incandescent light bulb. This set-up will be used in evaluating the effectiveness of the proposed wavelet-based energy approach for load disaggregation. The results of applying this approach using the four wavelet families are presented and the classification accuracies are presented and compared. Different power quality disturbances are included in this analysis; voltage variation, frequency variation and harmonic distortion. Finally, conclusions are presented in Chapter 5.

2. Literature Review

2.1 Introduction

This chapter presents an overview of previous work on non-intrusive load monitoring using single-point sensing. As shown in figure 2.1 the work presented in the literature can be grouped based on the analysis modes used in either steady-state or transients. This chapter is divided into three parts; a review of analysis modes used in non-intrusive load monitoring is presented, then a comparison of signals processing techniques such as Fourier transform and wavelet transform is introduced, and finally, a brief introduction on machine learning is presented.

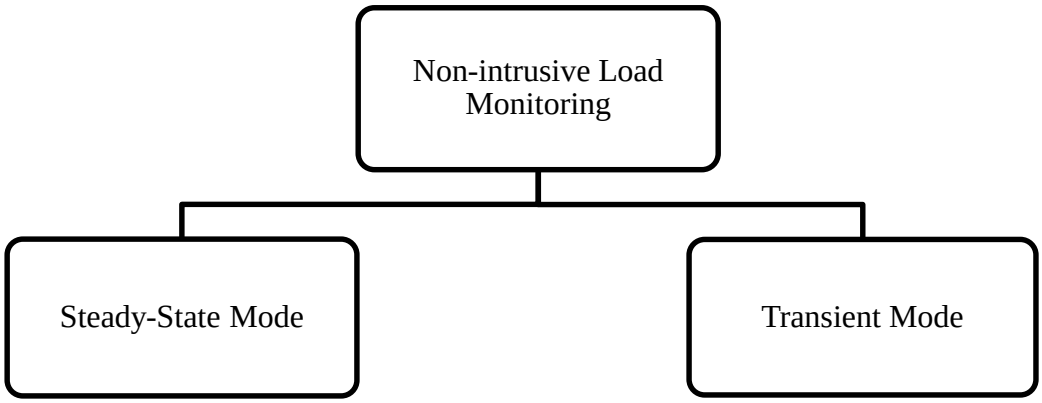

Fig. 2.1: Classification of previous work on non-intrusive monitoring

2.2 Previous Work on Non-intrusive Monitoring Methods

2.2.1 Steady-state-based methods

Hart [1] used the power levels to identify the appliance operation using steady-state analysis. The method performs well only in cases involving appliances with known power ratings and only when supplied form clean power source. In case of power quality disturbances such as harmonic distortion, the change in the power levels due to harmonics usually degrade the performance of method and hence some appliances operation may go undetected [2].

Roos et al. [3] relied on the steady-state signatures of appliances in an attempt to discriminate nonlinear industrial loads. Due to the nature of targeted loads, Roos et al. [3] utilized a third power component called distortion power (D), instead of just using the active and reactive powers (P and Q) respectively as in [1]. Although this approach was successful in detecting some appliances, the majority of modern appliances involving battery chargers and nonlinear loads failed to be detected.

Norford and Leeb [4] investigated heating, ventilation, and air conditioning equipment (HVAC) in commercial buildings depending on steady-state monitoring methods. Norford and Leeb [4] intended to assess whether the methodology which uses steady-state signatures of residential electrical loads can be implemented on electrical appliances in a large size facilities such as in commercial buildings. The problem with their approach is the degradation of its accuracy due to the use of power factor correction devices installed in commercial facilities.

Marceau and Zmeureanu [5] derived the steady-state signatures of seven appliances in the residential buildings using two mode approach consisting of sampling and evaluation. The operating characteristics of each of the targeted appliances are compiled from data recorder using 16 s intervals over a week, in the sampling mode. Marceau and Zmeureanu [5] utilized the electric current signals and active power when the source voltage is assumed to be 120 V and hence, it does not take into account reactive power calculation as in [1]. Although the complexity of the feature vector is reduced, this method cannot recognize two similar electrical appliances turned on or off coincidentally.

Cole and Albicki [6] developed an algorithm to detect individual appliances using the active and reactive power. The method relies on the change in the active and reactive power following a change in the switching of the appliance when changing from OFF to ON. The main limitation of this this method is in case of appliances operating at the same time and drawing the same amount of active and reactive power, the detection algorithm may not be able to discriminate between their operation.

Gupta et al. [7] used a single point sensing to detect electronic appliances by relying on the frequency content of the current signals of these appliances. The drawback with this method is that it is prone to other harmonic distortion either generated from other non-linear loads or from harmonic distortion in the voltage waveform.

Lam et al. [8] presented a method based on voltage-current (V-I) trajectory to characterize typical household appliances in a 2-dimentional form. Hierarchical clustering is then applied to group similar appliances characteristics. This method works

on a small number of appliances whose characteristics are unique. However, in case of different appliances but with the same characteristics, the method may not be able to detect them. Also since the trajectory used relies only on current and voltage signals, any change in the current would disturb the detection algorithm.

Liang et al. [9] used the Fourier series analysis to detect house hold appliances. The current signal is decomposed in the frequency domain and the frequency components are used to detect individual appliances operation. The main limitation is that Fourier series works only for period signal and in case of non-periodic currents, Fourier series provides continuous amplitude frequency spectrum which will be translated into errors in the detection process.

Marchiori et al. [10] measured the active (P) and reactive (Q) power for each specific appliance and mapped them in a 2D histogram in P-Q feature plane. Instead of reliance on the change in the power levels, a probabilistic approach was utilized. Depending on a naïve Bayes classifier, each appliance has been trained to detect its state using the corresponding probability. The proposed method assumes that state of appliances are independent of each other, which means that there is no correlation in their operation. This assumption is not true because some household appliances are correlated in their operation such as watching a television through DVD player [11]. Besides, if there is a correlation, using a naïve Bayes classifiers is not a good choice because the performance can be degraded [12].

2.2.2 Transients-based Methods

Steven et al. [13] investigated a methodology of a transient event detection using a single sensing point. The method was applied on four loads usually utilized in commercial and industrial facilities. The current drawn by these loads was monitored during start-up state, at the main entrance. As a consequence, the produced current signal is non-stationary. To overcome this obstacle and to reduce the complexity, features of inrush current were extracted by Short Time Fourier Transform (STFT). Although using Short Time Fourier Transform (STFT) may achieve a reasonable resolution, it is sensitive to the choice of the window size.

Norford and Leeb [4] discriminated a transient patterns for specific electrical appliances using active and reactive power and the associated harmonics of higher order. At the fundamental frequency, these metrics are derived by sampling the start-up current and voltage over one-second intervals. The proposed method assumed that a transient event consists of “a time series of segments”. Instead of utilizing all these segments, Norford and Leeb [4] relies on a specific varying segments called v-sections. Though two and multi-state appliances may be recognized by this method, activation them sequentially may not be disaggregated by this methodology.

Cole and Albicki [14] stated that during a start-up of residential appliances, their waveforms could be divided into a three salient features. These features are abrupt change in power called edges, gradual variations in power seen as a slope, and stabilized in power denoted as steady-state. The method utilized the first two features to disaggregate the total energy at home when current and voltage signals are sampled

simultaneously. The methodology is that matching edges to their slops. Unquestionably ON/OFF and Finite State Machine appliance models are discriminated in P-Q feature by the proposed algorithm; however, active (P) power and reactive power (Q) need to be accumulated over a period of time [6]. Besides, consumption of permanent appliances cannot be discriminated by this method [11].

Chang et al. [15] investigated a five classes of loads at industrial building when the electric source is varied, gradually. Both current and voltage waveforms were monitored at 480 V common bus, and sampled concurrently during the turn-on event. Aside from features of total current/voltage harmonic distortion, turn-on transient energy was added to the feature space. Besides, features of active and reactive power utilized for comparison purpose.

These features were extracted by Wavelet transform and derived from individual and multiple operations. Back propagation (Bp) and learning vector quantization (LVQ) were utilized for training and testing different scenarios using neural network classifier. Although the recognition accuracy is high for the individual operation of these loads, training these appliances by neural network classifiers considers exhaustive. Besides, the proposed method in multiple operations does not achieve the same recognition accuracy as in individual operation using the validation dataset.

Chang [16] performed different scenarios using simulation and experimental test-bed to monitor the current and voltage signals from a single point of sensing, in a single and three phase system. The proposed method relies on a transient time response during

turn-on/off different appliances, individually or collectively. The transient time response is computed based on the following formula:

$$\mathrm{t}_{TR} = \mathrm{t}_{end} - \mathrm{t}_{start} \tag{2. 1}$$

where t_{end} represents a difference of transient ending time and t_{start} represents a transient starting time. Short Time Fourier Transform (STFT) and Discrete Wavelet Transform (DWT) were utilized and compared to detect the transient time response which was monitored using a 4 s time period. After that, the one-phase transient energy was calculated using the following formula:

$$V(k) = v(k) - v(k-1) \tag{2. 2}$$

$$\mathrm{I(k)} = \big(i(k) - i(k-1)\big)/\,2 \tag{2. 3}$$

$$U_T = U_{1\varphi,transient} = \sum_{k=0}^{k} V(k)I(k) \tag{2. 4}$$

where $V(k)$ and $I(k)$ are the transient voltage and average transient current for sample k, respectively. Similarly, $v(k)$ and $i(k)$ are the transient voltage and transient current for sample k, while $v(k-1)$ and $i(k-1)$ represent the transient voltage and transient current for sample $k-1$. The three-phase transient energy can be determined as follows:

$$U_T = U_{3\varphi,transient} = \sum_{k=0}^{k} \left(I_a(k).V_a(k) + I_b(k).V_b(k) + I_c(k).V_c(k)\right) \tag{2. 5}$$

where $I_a(k), I_b(k)$, and $I_c(k)$ are the average transient current values in phases *a*, *b*, and *c* for sample *k*, respectively. Likewise, $V_a(k), V_b(k)$, and $V_c(k)$ are differences of transient voltage for sample *k*, in phases *a*, *b*, and *c*, respectively. Multi-Layer Feed forward Neural Network (MFNN) was trained by features of transient energy that are derived from turning a three loads on/off, individually and as a group. Besides the

training using Multi-Layer Feed forward Neural Network (MFNN) which considered time-consuming, the proposed algorithm used a high sampling frequency which is 512 samples for each cycle.

Shaw et al. [17] applied a short-time Fourier transform (STFT) based approach to detect spectral envelop coefficients based on two dimensions. Each cycle of voltage and current waveforms are observed and re-sampled at 128 samples/cycle as the sampling rate. The re-sampled voltage and current data are utilized to be compared and classified based on the validation space. The validation space is a database consists of different signatures representing envelops of different appliances. The classification can be done by measuring the similarity between an incoming envelop to those in the database. The similarity is estimated based on minimum distance between an incoming envelop to the signature envelop in the validation space [18]. Although many appliances could be classified accurately using this methodology, each appliance requires to be trained excessively.

Dawei et al. [19] designed a system using hardware and software for demand response (DR). The proposed system makes use of non-intrusive load monitoring (NILM) to recognize major loads in buildings. Depending on their characteristics, household appliances can be clustered into two categories as *high-power demand response loads* and *plug-in back-up demand response loads*, according to [19]. In this study, several appliances of both categories were targeted using different features such as transient impedance. Although a hardware-based classification approach was explained, it just targets the individual appliance and does not take into account its combination with other.

Wang et al. [20] attempted to classify residential appliance based on their working styles. At the meter level, power consumption of household appliances can be seen as a combination of two basic units, triangles and rectangles. These units are utilized to form and reduce the overlap in the feature space, according to [20]. Fast switching events produced by appliance are mapped into triangles. The attribute set includes the *start time*, *peak time*, *peak value*, and the *end time*, for the triangle class. In each second, effective voltage value, effective current value, and real power are monitored and sampled. Although the proposed method does not utilize a high frequency measurement method, pattern of appliances with a known profile may be recognized using this method [21].

Chang et al. [22] proposed the same methodology as [16], with a small modification to the test bed. Instead of measuring the electrical current using a traditional current transformer (CT), a coreless Hall CT is utilized to reduce the produced distortion by the hysteresis of the iron cores. Although the non-sinusoidal current waves can be detected using a new coreless current transformer, loads that have an operational modes or with low power consumption are not tested here.

Froehlich et al. [23] developed a method to disaggregate end-use energy by means of voltage noise. Instead of digitizing electrical current waveforms which requires a professional installation to be measured, any electrical socket can be utilized to compute the voltage signals, as stated by [23]. This method transfers a transient voltage noise into a feature vector that can be detected by a fast Fourier transform (FFT) and

classified by a support vector machine (SVM). FFT is performed on one microsecond sliding window.

Although several electrical events can be detected and classified by this methodology, FFT is sensitive to size of the chosen window. Also, it is well known that SVM is very sensitive to the choice of the kernel function type [24]. Therefore, it was not clear whether SVM have been utilized as a binary classifier or multiclass classifier. If it is the former, there would be imbalance in the data set; as consequence, the stated accuracy may not be accurate which might not be relevant to the events. If it is the latter, training SVM as multiclass classifier is very time consuming.

Chang et al. [25] improved the proposed methodology in [22] by means of applying Parseval's theorem to the coefficients of Daubechies mother wavelet to extract the energy spectra of the transient signals. Although the study was conducted using a similar test-bed system as in [22], it utilizes a member of one wavelet family based on Daubechies mother wavelet. However, it does not take into account other families such as Symlets, Coiflets and Biorthogonal families.

2.3 Summary

In non-intrusive load monitoring, each appliance's power can be extracted from the total measured power using power signatures. The methods of analysis used to find such power signatures can be classified depending on the analysis mode used as steady-state or transients.

In previous work, steady-state power signatures have been derived using a step change in the power to identify appliance operation. The advantage of using steady-state power signatures is that it doesn't need high sampling rate and also the power can be detected based on each appliance rating [1]. However, the challenge in this approach is the potential overlap with low power appliances and/or when two appliances have almost same ratings. Also, the use of power signatures based on active power (P) and reactive power (Q) may be affected due to the use of power factor correction devices.

As a result, a third power quantities has been proposed which is called distortion power (D) in addition to the active and reactive power. Since distortion power is a measure of the power resulted from harmonic distortion, the power signatures in steady-state are susceptible to any harmonic distortion from an external source which makes the approach problematic. Moreover, when using the active power, reactive power and distortion power as the power signatures in steady-state analysis mode, some modern appliances such as battery chargers cannot be detected.

Also, instead of using power signatures, the current signal computed in steady state have been used in conjunction with voltage. The use of voltage-current (V-I) trajectory has been also proposed in the literature in steady state analysis mode, however, the main issue with this approach is when two similar electrical appliances are turned on or off coincidentally, the method fails to discriminate between them and also the features of different appliances but with the same characteristics may not be classified.

The main limitation of using steady-state methods reported in the literature is this methods are only applicable when all transients die out. Since this usually involves few

cycles and sometimes almost few seconds that must elapse to ensure that all transient die out, this results into time delay until the algorithms start to collect data to perform the classification. The issue of time delay in the response of all methods based on steady state analysis has turned the attention to methods that rely on signatures in transients to overcome the slow response problem.

Most of the transient analysis methods rely on the information contained in transients resulting from the switching of appliances when they come into operation [26]. Therefore, transient signatures may be characterized by magnitude, frequency and time features. Based on previous work, the analysis methods used can be classified as either frequency domain or time domain methods. Frequency domain methods relies on Fourier transformer which provides magnitude-frequency spectrum to find transient signatures in the signals' frequency content. On the other hand, time domain methods use the time information in the signal as the feature for classification and detection of the appliances. Also the use of Short-Time Fourier Transform (STFT) has been reported in the literature which provide time-frequency spectrum. The main limitation of Fourier-based techniques is the tradeoff between time and frequency resolution. Moreover, Fourier analysis is based on sine and cosine function which limits its applicability to signals that can take same shape as those basic function. However, in transient the signals usually behaves in a different way from sine and cosine and hence Fourier-based techniques may not be a suitable tool.

Wavelet transform which is a time-frequency analysis method has been reported in the literature. Despite being able to address the trade-off between time and frequency

resolution through the adaptive window, unlike Fourier which uses a fixed window throughout the analysis, there are many parameters that could affect the detection process when using wavelets. For example, wavelet families have a rich library of basic functions that could be used (e.g., Daubechies, Coiflets, Symlets, and Biorthogonal) and it is not clear in the literature which wavelet should be suitable in the analysis. Moreover, the choice of the number of wavelet decomposition levels plays a role in the analysis and this needs to be justified.

To automate the process of appliance detection in non-intrusive load monitoring application, supervised machine learning techniques have been used. Since the problem of non-intrusive appliance load monitoring involves more than two appliances, the binary classification problem can be transformed into several binary classification problems and then a binary machine learning classifier can be used. Machine learning algorithms usually try to find decision boundaries to find patterns in the feature vectors so that the appliance's operation can be detected. The machine learning process usually starts by building the classification model using training data set and then use the testing data set to let the machine learning classifier to predict new instances. The classification accuracy is usually used as the measure of the performance of the classifier.

3. Methodology

3.1 Introduction

This chapter starts by presenting the mathematical formulation of the power components used in steady-state analysis mode for non-intrusive load monitoring followed by a presentation of Fourier Transform to extract the power components at the power system frequency (i.e., 60 Hz). The fundamentals of wavelet transform as a time-frequency analyzing tool used in this thesis to extract the hidden features in the electrical signals is also presented.

In order to automate the process of non-intrusive load disaggregation, Decision Tree (DT) classifier is introduced as the machine learning tool to perform such task. The mathematical background and the parameters setting of such algorithm is introduced. Also this chapter presents the classification accuracy measure which is used in this work to assess the performance of the Decision Tree classification model developed for non-intrusive load monitoring.

3.2 Fourier Transform

In signal analysis Fourier Transform (FT) provides an amplitude-frequency spectrum of the time domain analysis signal *x(t)* using the following formula:

$$X(f) = \int_{-\infty}^{\infty} x(t) e^{-j2\pi f t} dt \tag{3.1}$$

In Fourier Transform any periodic signal can be presented using an infinite sum of periodic complex exponential function from minus infinity to plus infinity as the integral

shows. When Fourier Transform (FT) is applied to the time domain voltage and current signals the corresponding fundamental components can be extracted from which the three power components active P, reactive Q and apparent power S can be computed.

$$P_1 = V_1 I_1 cos\theta_1 \tag{3.2}$$

$$Q_1 = V_1 I_1 sin\theta_1 \tag{3.3}$$

$$S_1 = V_1 I_1 \tag{3.4}$$

Where, the subscript '1' is used to refer to the fundamental power system component (i.e., 60 Hz), *V* and *I* are the root mean square of the voltage and current signals and θ_1 is the phase angle displacement.

The main limitation of Fourier transform is that it assumes that the signal is periodic and hence it is not suitable for transient signals. Also Fourier Transform suffers fixed window size and hence there is always a tradeoff between time and frequency resolution.

3.3 Wavelet Transform

Wavelet means a small wave and it has a finite length. The continuous wavelet transform can be formulated mathematically as following:

$$C(a,b) = \int_{-\infty}^{\infty} f(t)\varphi_{a,b}(t)dt \tag{3.5}$$

where, $\varphi_{a,b}(t) = a^{\frac{1}{2}}\varphi(\frac{t-b}{a})$ represents a window function and the term a is for scaling and the term b for translation.

Wavelet transform is a time-frequency representation of any signal. Unlike, all Fourier-based transforms (Discrete Fourier, Fast Fourier or Short Time Fourier Transform) which suffer fixed size window, wavelet transform is able to provide variable size window as shown in figure 3.1 and hence time and frequency resolutions are not compromised. Scaling parameter in Wavelet transform is inversely related to frequency parameter. High scales indicate low frequencies and low scales indicate to high frequencies.

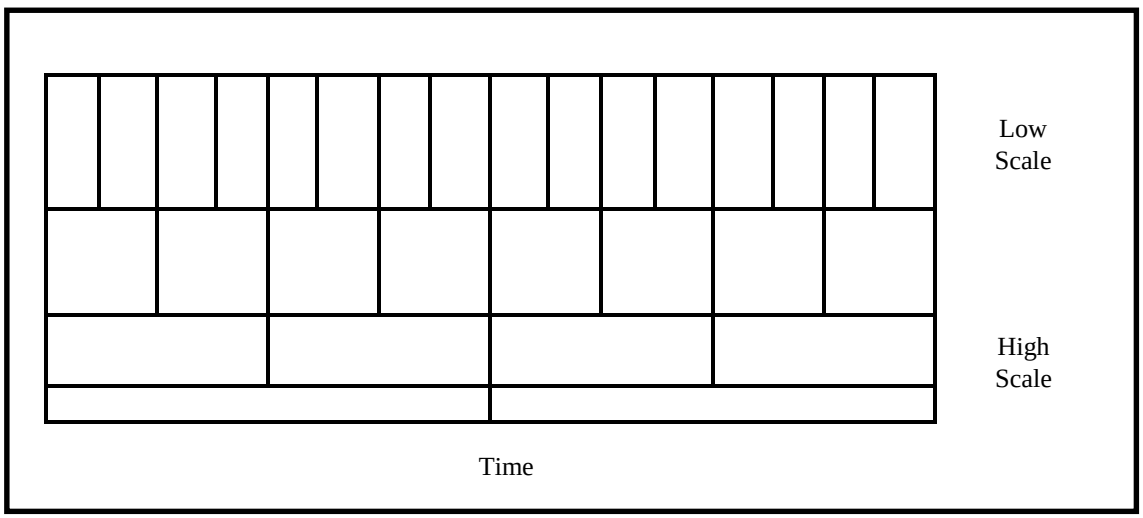

Fig. 3.1: Time-scale of wavelet transform.

3.3.1 Discrete Wavelet Transform

In wavelet analysis, the signal *x(t)* can be expressed in terms of the basic functions in approximations and details.

$$x(t) = \sum_k cA_0(k)\emptyset_{j,k}(t) \tag{3.6}$$

$$x(t) = \sum_k cA_1(k)\emptyset_{j-1,k}(t) + \sum_k cD_1(k)\varphi_{j-1,k}(t) \tag{3.7}$$

The process starts by extracting the signal component at scale index j and generate the two sets of coefficients $cA_1(k)$ and $cD_1(k)$ at scale j-1. Also, given the two sets of coefficients at scale j-1, the original signal $x(t)$ can be obtained using $cA_0(k)$. The former process is usually known as decomposition step while the latter is commonly known as reconstruction step. This decomposition/reconstruction process can be seen as filtering of the analysis signal using low-pass and high pass filters.

$$cA_1 = \sum_k h_0(k-2n)cA_0(k) \tag{3.8}$$

$$cD_1 = \sum_k h_1(k-2n)cA_0(k) \tag{3.9}$$

Where, cA_1 and cD_1 represent the approximation and detail wavelet coefficients at level 1, h_0 and h_1 represent the low-pass and high pass filter coefficients. The down-sampling involved in the computation of the wavelet coefficients is simply done by omitting every other value of the samples making the discrete-time signal $x(n)$. Since down-sampling is performed during the decomposition phase, an up-sampling process is performed during the reconstruction phase.

Several wavelet basis functions can be chosen to perform the analysis and hence different filter characteristics can be used in the decomposition phase. The following is a brief summary of each wavelet family and its characteristics.

3.3.1.1 Daubechies Wavelet

This family is named after the scientist Ingrid Daubechies who has invented the compactly supported orthonormal wavelets for discrete wavelet analysis. Figure 3.2 (a) and (b) shows the scaling and wavelet functions of Daubechies of order 2 and 3

respectively. Figure 3.3 (a) and (b) shows the frequency responses of the Daubechies filters of order 2 and 3 respectively.

Inspection of figure 3.3 reveals that Daubechies filters of higher order tend to have sharp fall-off characteristics in the transition band. This property is needed to eliminate any unwanted signal components in the stop band of the filter. In this thesis, ten members of this family (Daubechies 1 to Daubechies 10) are used in the non-intrusive load monitoring.

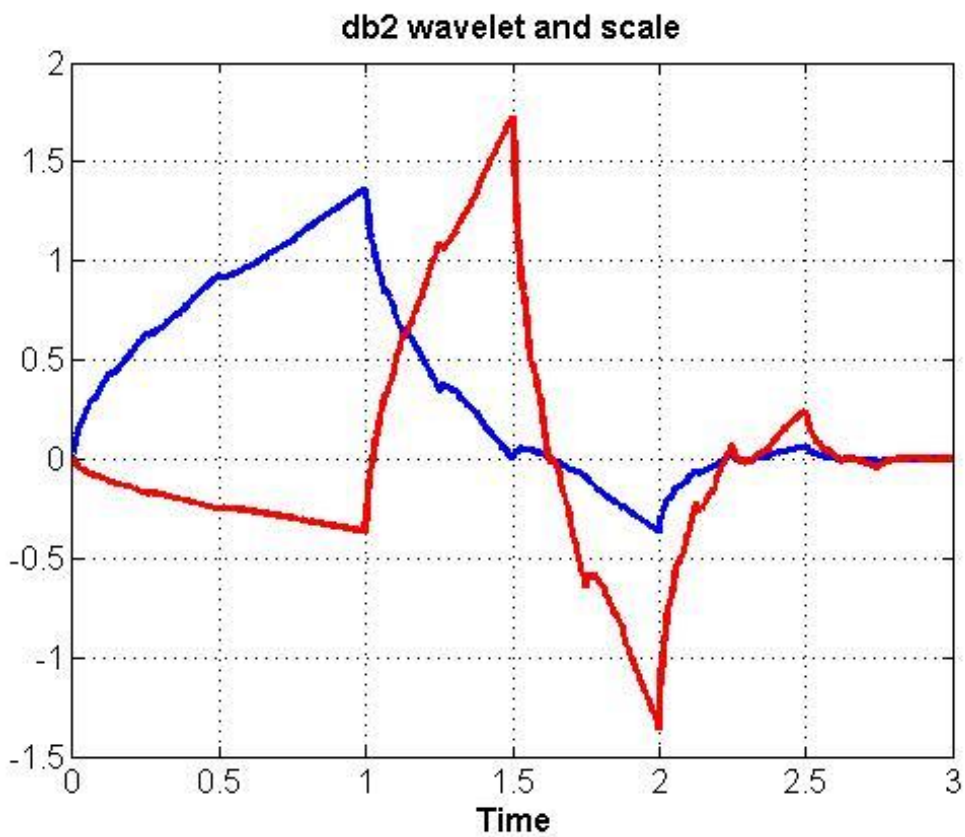

(a)

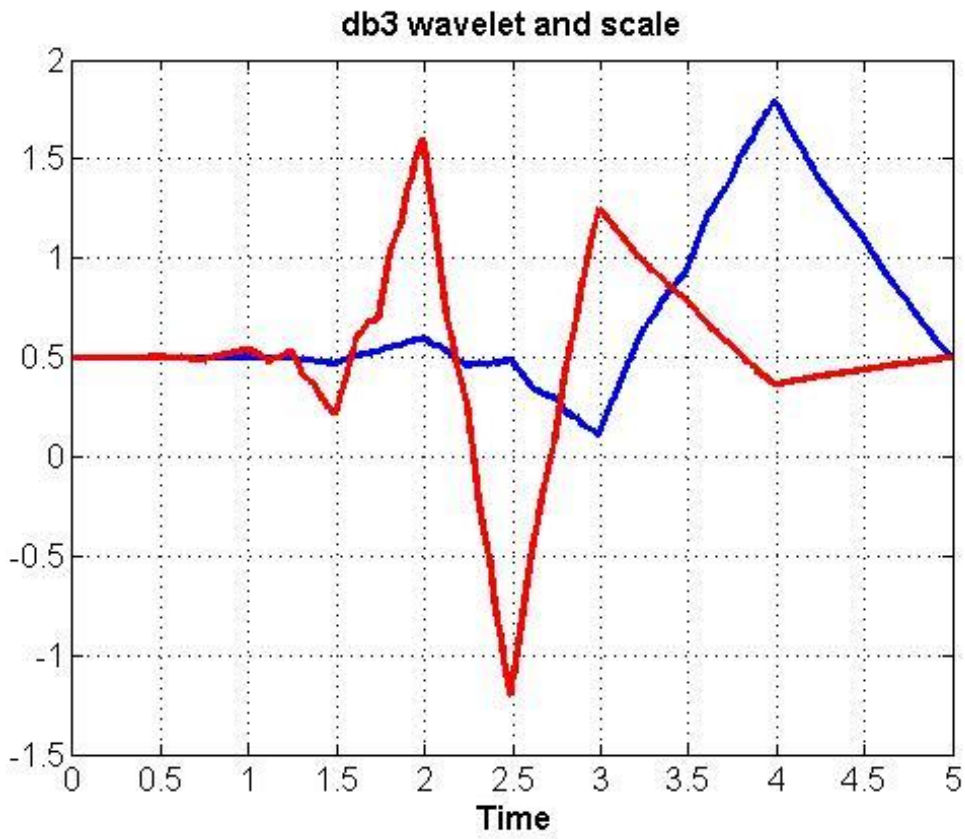

(b)

Fig. 3.2: Daubechies of order 2 and 3. Scaling function in blue and wavelet function in red.

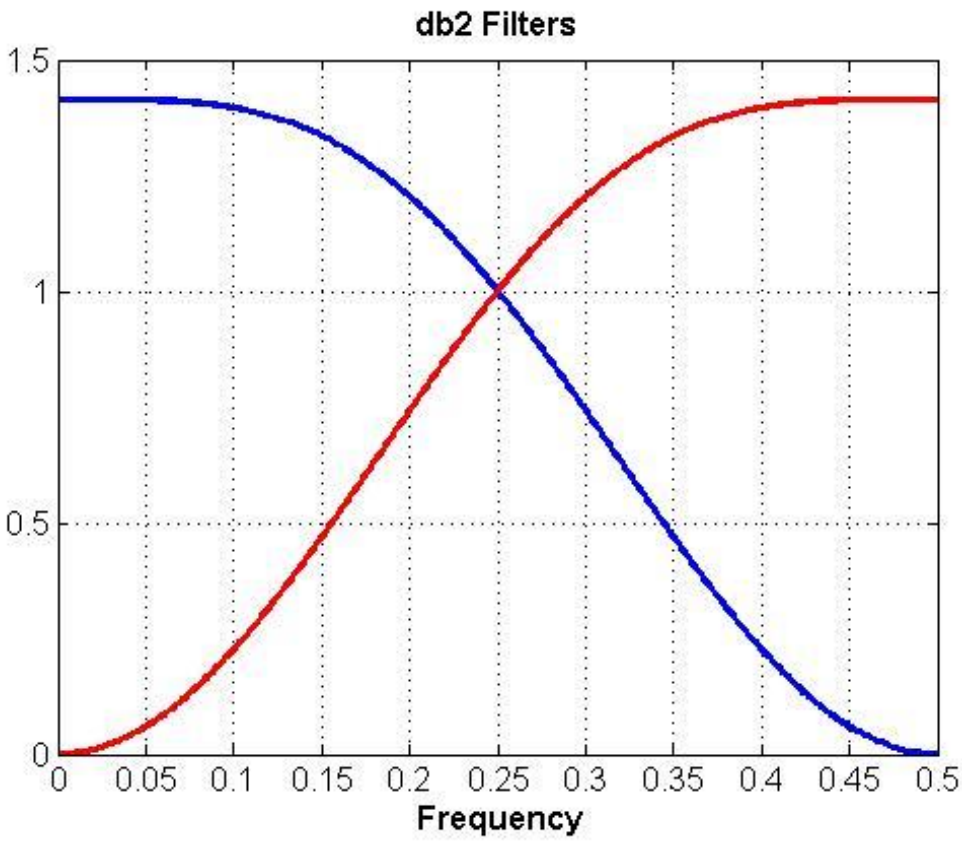
db2 Filters
1.5
1
0.5
0
0
0.05
0.1
0.15
0.2
0.25
0.3
0.35
0.4
0.45
0.5
Frequency

(a)

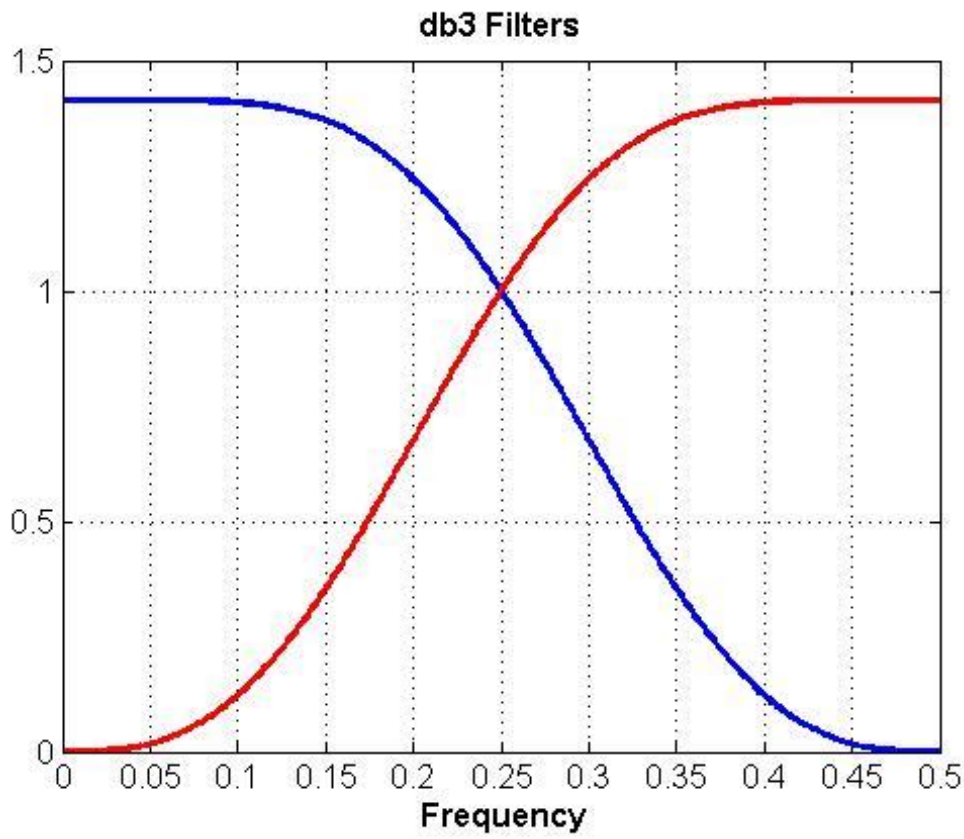

(b)

Fig. 3.3: Frequency response of Daubechies filters of order 2 and 3. Low pass filter in blue and high pass filter in red.

3.3.1.2 Coiflets Wavelet

This family is also developed by Ingrid Daubechies but at the request of Ronald Coifman. Figure 3.4 (a) and (b) shows the time domain scaling and wavelet functions of Coifletss of order 1 and 2 respectively. The frequency response of the Coiflets filters shown in figure 3.5 reveal that these wavelets are characterized by more flatness in the

low frequency range compared to that of Daubechies filters. Five members of this family (Coiflet 1 to Coiflte 5) are covered in this thesis.

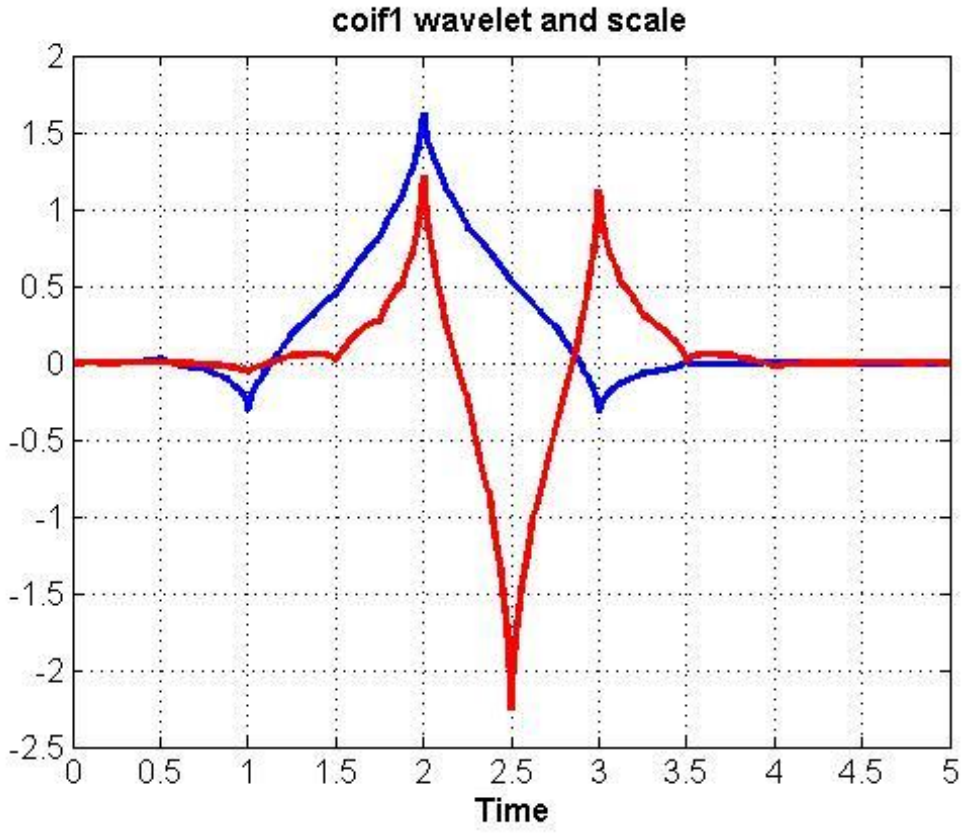

(a)

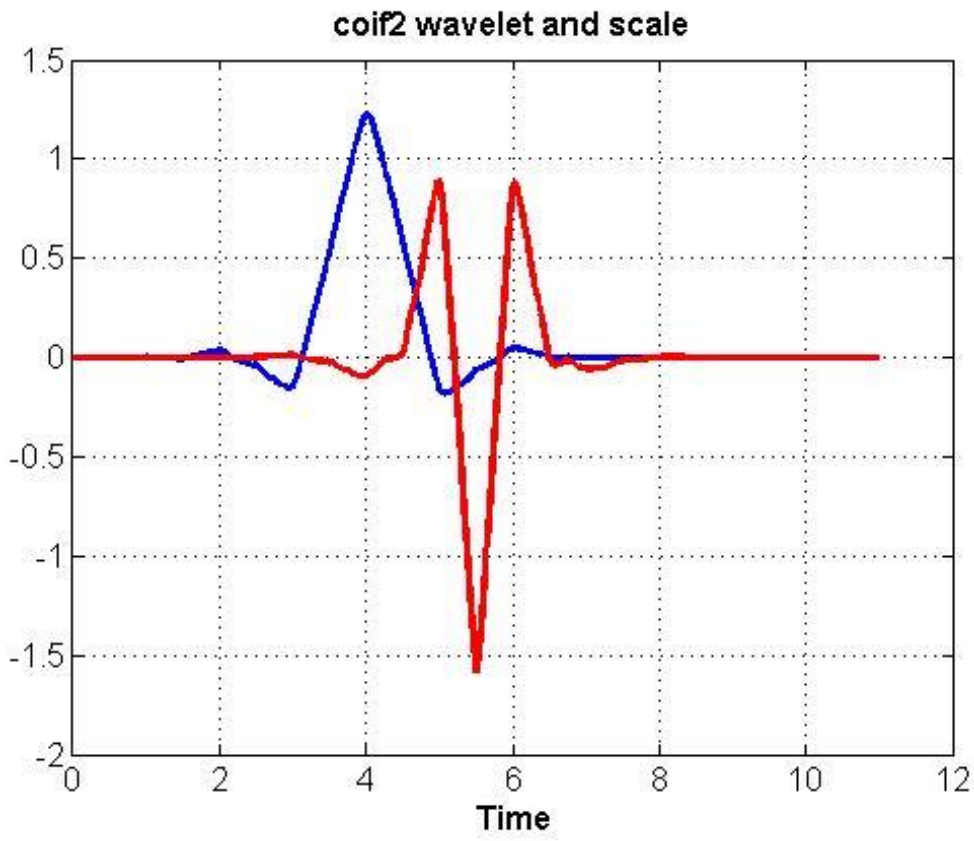

(b)

Fig. 3.4: Coiflets of order 1 and 2. Scaling function in blue and wavelet function in red.

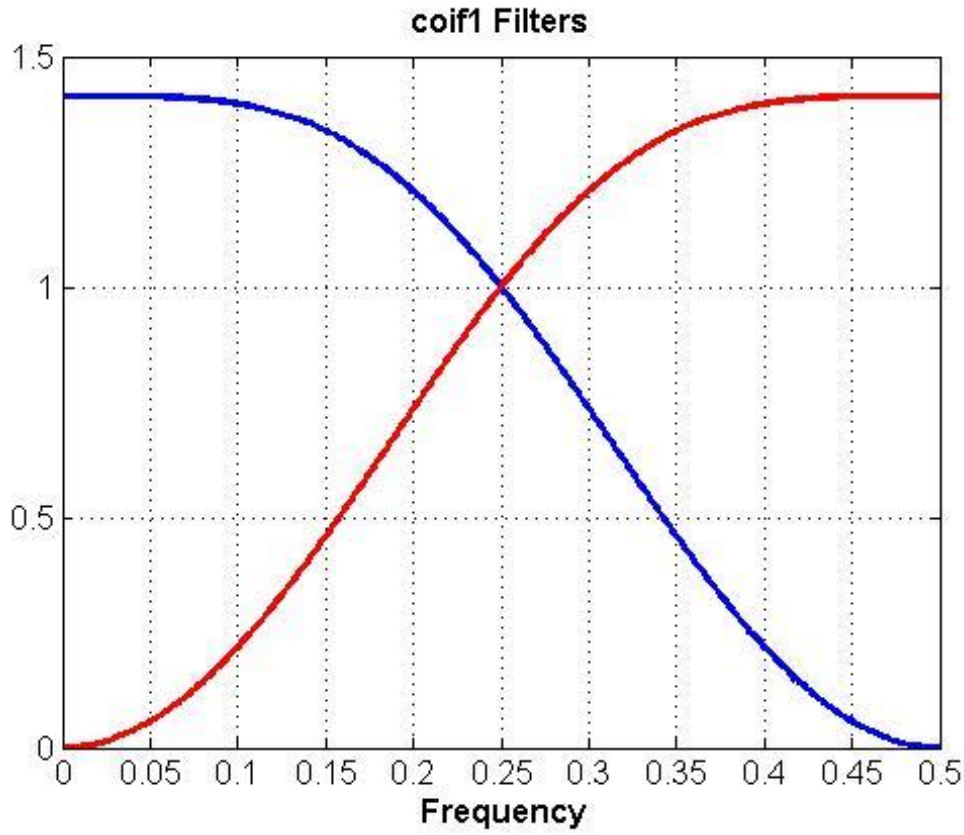
coif1 Filters
1.5
1
0.5
0
0
0.05
0.1
0.15
0.2
0.25
0.3
0.35
0.4
0.45
0.5
Frequency

(a)

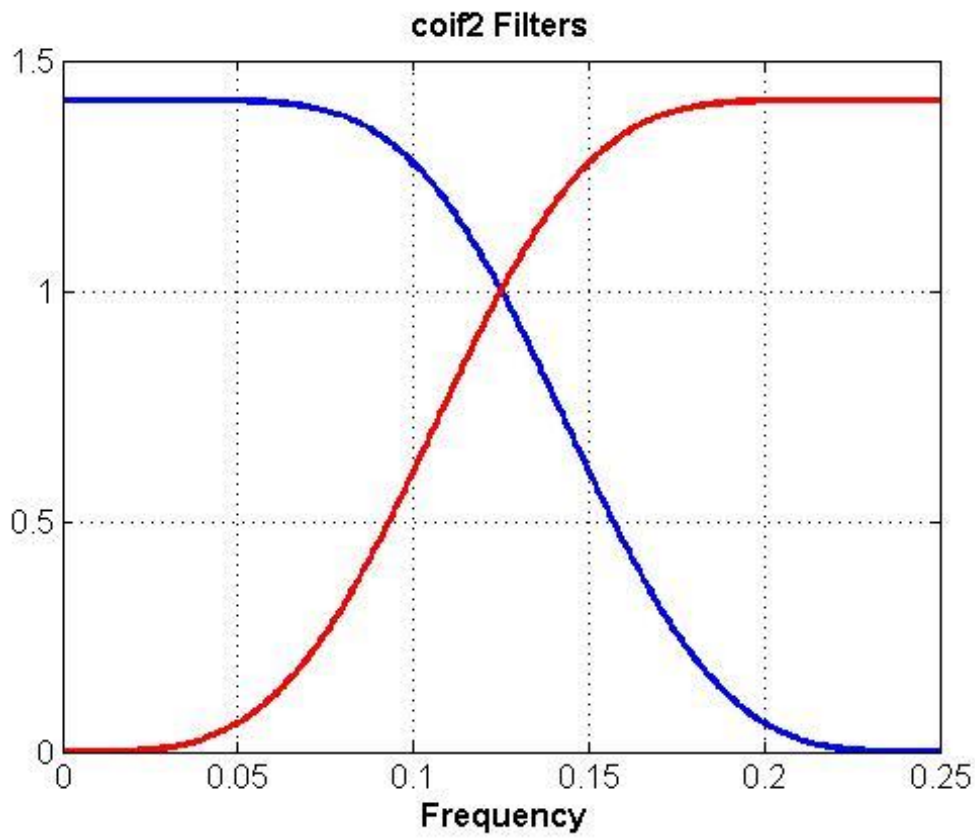

(b)

Fig. 3.5: Frequency response of Coiflets filters of order 1 and 2. Low pass filter in blue and high pass filter in red.

3.3.1.3 Symlets Wavelet

This family was developed by modifying Daubechies family so that the phase response of the filters become symmetric. The magnitude response in the frequency domain is similar to that of Daubechies filters. Ten members of this family (Symlet 1 to Symlet 10) are included in this work.

3.3.1.4 Biorthogonal Wavelet

Orthogonal wavelets are characterized by same scaling and wavelet functions in both stages; decomposition and reconstruction. However, in biorthogonal wavelets, two different set of scaling and wavelet functions are used in the decomposition and reconstruction stages. The decomposition and reconstruction using biorthogonal wavelet cans be mathematically expressed as:

Decomposition $x(k) = \langle x, \widetilde{\emptyset} \rangle$ and reconstruction $x = \sum_k x(k)\emptyset$ (3.10)

3.3.2 Wavelet-based Feature Extraction

Discrete Wavelet transform (DWT) is used in this thesis to map the target signal X (current signal) into the frequency domain by computing the wavelet coefficients using the low and high pass filtering. The energy of the wavelet coefficients usually hold prominent features of the target signal and therefore extracting these hidden features would help in the load classification process.

In this study, the information contained in the change in the target signal X following the switching of loads is used for NILM. Unlike previous work in which the energy of the wavelet coefficients of the original signals are used directly for load identification, the change in the signal is used in this thesis and is computed using the difference between samples over the cycles. Figure 3.6 illustrates the process of computing the sample differences over the cycles of the target signal X to obtain X_d. Wavelet transform is then applied to X_d to find the approximation and details wavelet coefficients cA and cD using the inner product with the scaling and wavelet functions $\emptyset$

and φ respectively. The energy of the computed wavelet coefficients is then calculated for both the approximation and detail levels j:

$$E_{cA} = \sum_l |cA(l)|^2 \quad \text{and} \quad E_{cD} = \sum_l |cD(l)|^2 \tag{3.11}$$

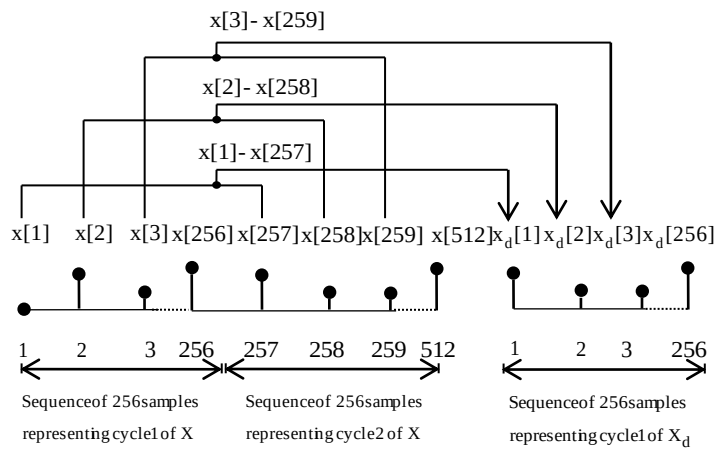

Fig. 3.6: Sample difference between sequences of the target signal X

3.4 Machine Learning Classification

3.4.1 Decision Tree Classification

The objective of this study is to develop a classification tree model using the power components as features for non-intrusive load monitoring applications. Decision Tree (DT) uses the greedy Hunt's algorithm which relies on assessing the impurities on each node and then determines the best split among attributes that gives the lowest node impurity measured by Gini index

$$Gini(t) = 1 - \sum_{m=0}^{c-1} [p(m|t)]^2 \tag{3.12}$$

Where $p(m|t)$ is the fraction of records belonging to class *m* at a given node *t* [27].

Since Decision Tree is mainly designed to work for binary classification problems, the challenges comes from the binary characteristic of the method which means the method can only classify data into two classes. Typically in Non-intrusive Load Monitoring applications more than two classes (i.e., loads) need to be identified and hence the problem becomes of multi-class type. In order to overcome this challenge, the "one-against-rest" method is utilized in which one class is set as positive and the remaining classes are set as negative. By doing so, this multi-class problem can be transformed into multiple binary classification problems and hence binary decision trees can be applied since class's labels are either positive or negative.

3.4.2 Training, Testing and Classification Accuracy

The Decision Tree algorithm requires two subsets; one for training and one for testing. The original data set obtained after computing the energy of the wavelet coefficients as outlined in the previous subsection is divided into two subsets. The first subset is used to develop the DT model needed for load classification and is known as training subset. The second subset is used by the DT model to predict previously unseen records and hence is used for testing the classifier capability to identify the loads.

The performance of the DT classification model that is developed using the power components features is measured in this study using the classification accuracy index μ

$$\mu = \frac{\text{Number of records correctly classificed by DT}}{\text{Total number of records}} \quad (3.13)$$

Typically, in Decision Tree classifier, the training accuracy is much higher than the classification (or sometimes called testing) accuracy. The reason for this is because when the training accuracy is computed, the training records are used which are also used in developing the classification model and therefore, the number of misclassified cases become small. Since the interests is usually to assess the performance of the classifier to predict previously unseen cases, the classification accuracy (or testing) is used this work to assess the performance of the developed DT classification model for non-intrusive appliance monitoring.

3.5 Contribution

In this thesis, the wavelet transform which is a powerful time-frequency analysis tool is investigated to assess its effectiveness in extracting the hidden features in the analysis signals resulted from individual appliances operation for non-intrusive load monitoring application. The current signals sensed at the single point of measurement are sampled and the energy of the wavelet coefficients are computed using the change in the current sequence after being discretizing. Four wavelet families are investigated in this thesis; Daubechies, Symlets, Coiflets and Biorthogonal. The work presented in this thesis aims to identify the most appropriate wavelet to perform such analysis and be able to extract the hidden features in the transients' signals using the energy-based wavelet coefficients.

In order to automate the load detection process, Decision Tree classifier which is a supervised machine learning is used to develop the classification model using the identified features obtained from the energy of the wavelet coefficients. The classification models corresponding to each wavelet family is tested under different power quality disturbances such as voltage magnitude variations, frequency variations and harmonic distortion. The classification accuracy is used as a measure of the prediction performance of the classification model obtained from each wavelet family.

4. Results and Discussion

4.1 System Description

The set-up used to generate the data set in this research is as shown in figure 4.1. The set-up consists of 4 different loads: Battery charger (BAT), Fluorescent Lamp (CFL), Personal Computer (PC) and incandescent Light Bulb (LB). The set-up is modeled in PSCAD/EMTDC after modeling all the loads according to [28] and [29] as shown in figure 4.2.

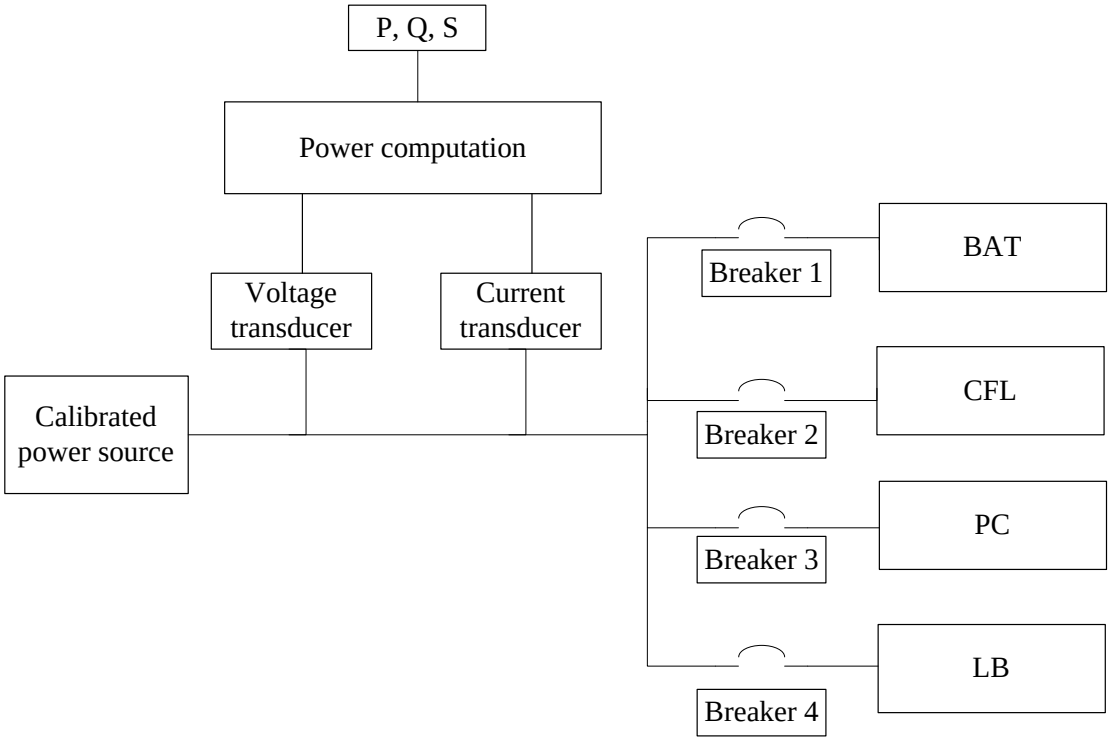

Fig. 4.1: Block diagram for the four-load set-up.

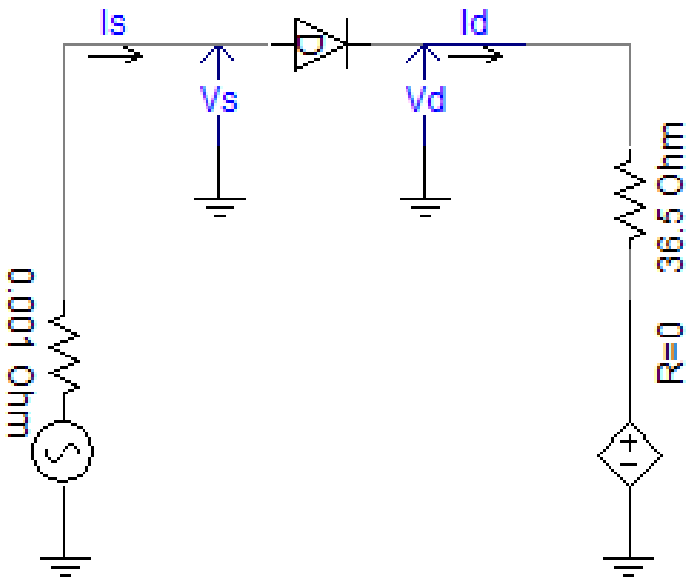

(a)

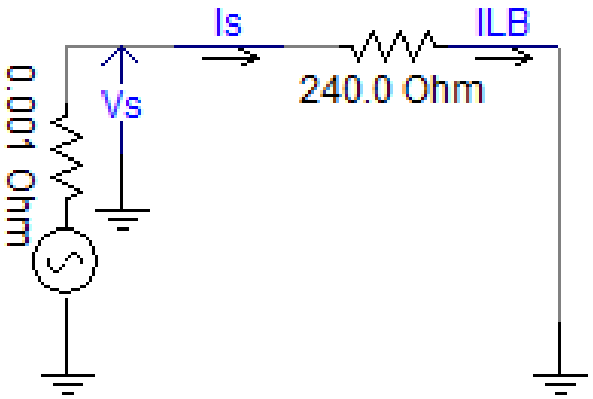

(b)

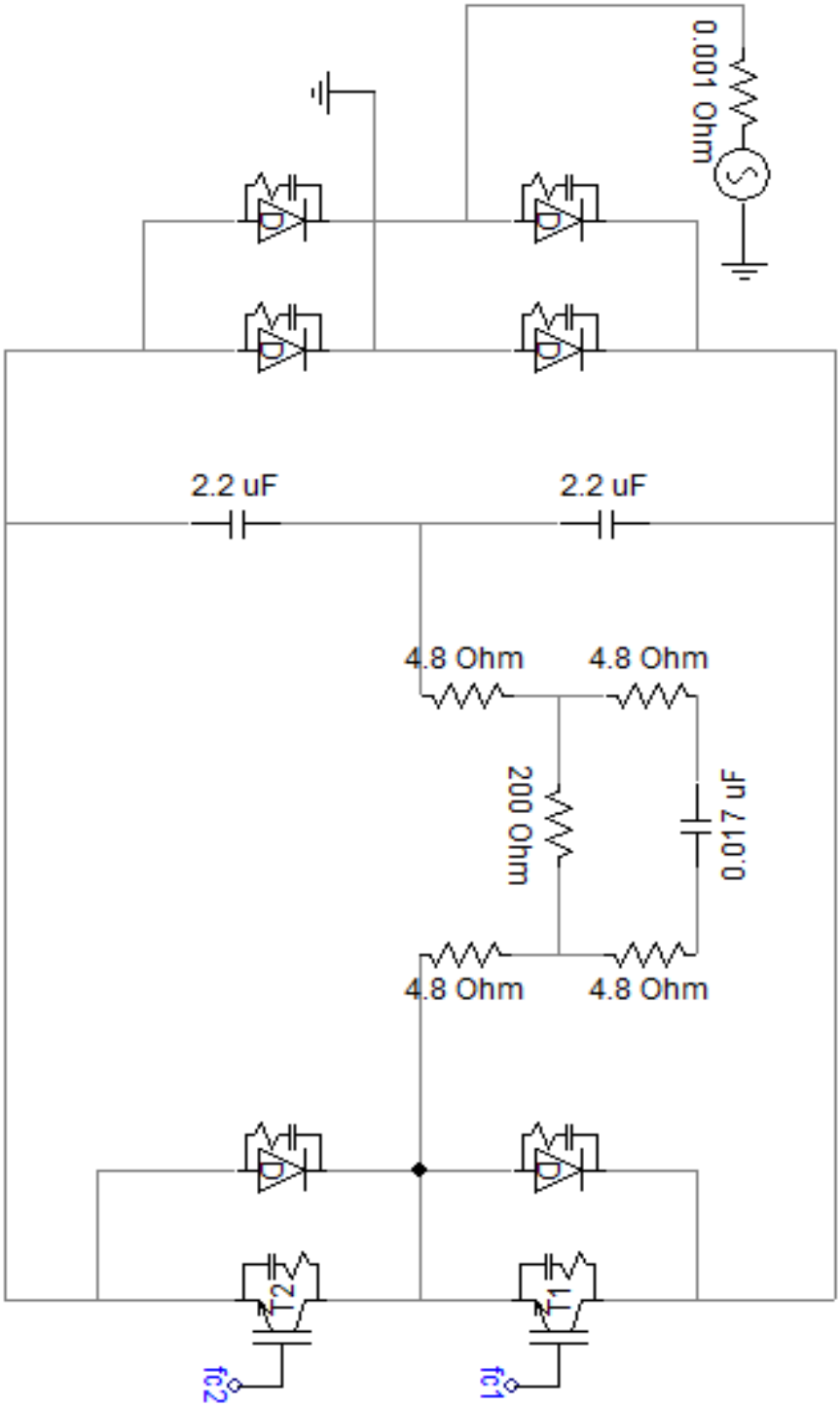
0.001 Ohm
2.2 uF
2.2 uF
4.8 Ohm
4.8 Ohm
200 Ohm
0.017 uF
4.8 Ohm
4.8 Ohm
T2
T1
fc2
fc1

(c)

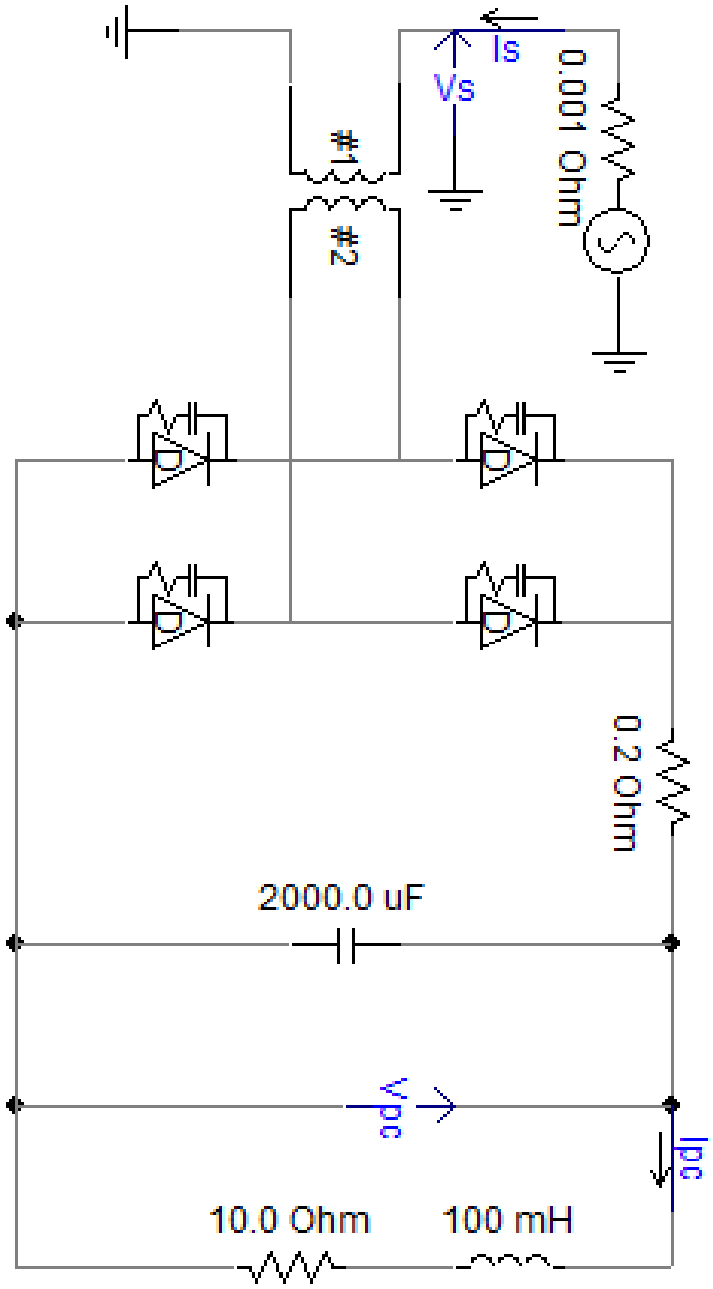

(d)

Fig. 4.2: Circuit diagrams modeling the four-load set-up. (a) Battery charger, (b) Incandescent light bulb, (c) Fluorescent lamp and (d) Personal computer.

The simulation time is set to 10 seconds and the loads are switched after 3 seconds. The voltage and current signals are sampled at 256 samples per cycle (i.e., the sampling rate is 15.36 kHz). These loads are supplied from a dedicated calibrated power source and the measurements are taken at a single point using voltage and current transducers. Table 4.1 lists all possible load switching of the four breakers used in the set-up.

Table 4.1 Breakers switching status for the four-load set-up.

Breaker 1	Breaker 2	Breaker 3	Breaker 4
T	B	C	D
B	T	C	D
B	C	T	D
B	C	D	T

Each breaker is switched on after 3 seconds if it has true case (T) label. Other breaker variables (B or C or D) can only have binary values, either 0 or 1. If it is 1, the breaker is switched on at zero seconds. Otherwise, the breaker is off over this entire run, which is 10 seconds. In addition to the base case where no disturbance is applied, the following three power quality disturbances are applied: voltage variations, frequency variations and harmonic distortion as explained in detail in the following subsection.

4.2 Verification

The verification phase is important to investigate if these models have been built correctly. To achieve this aim, the measured current for each load as in figure 4.3 is compared with the calculated currents of the four loads considered in this study as shown in Table 4.2.

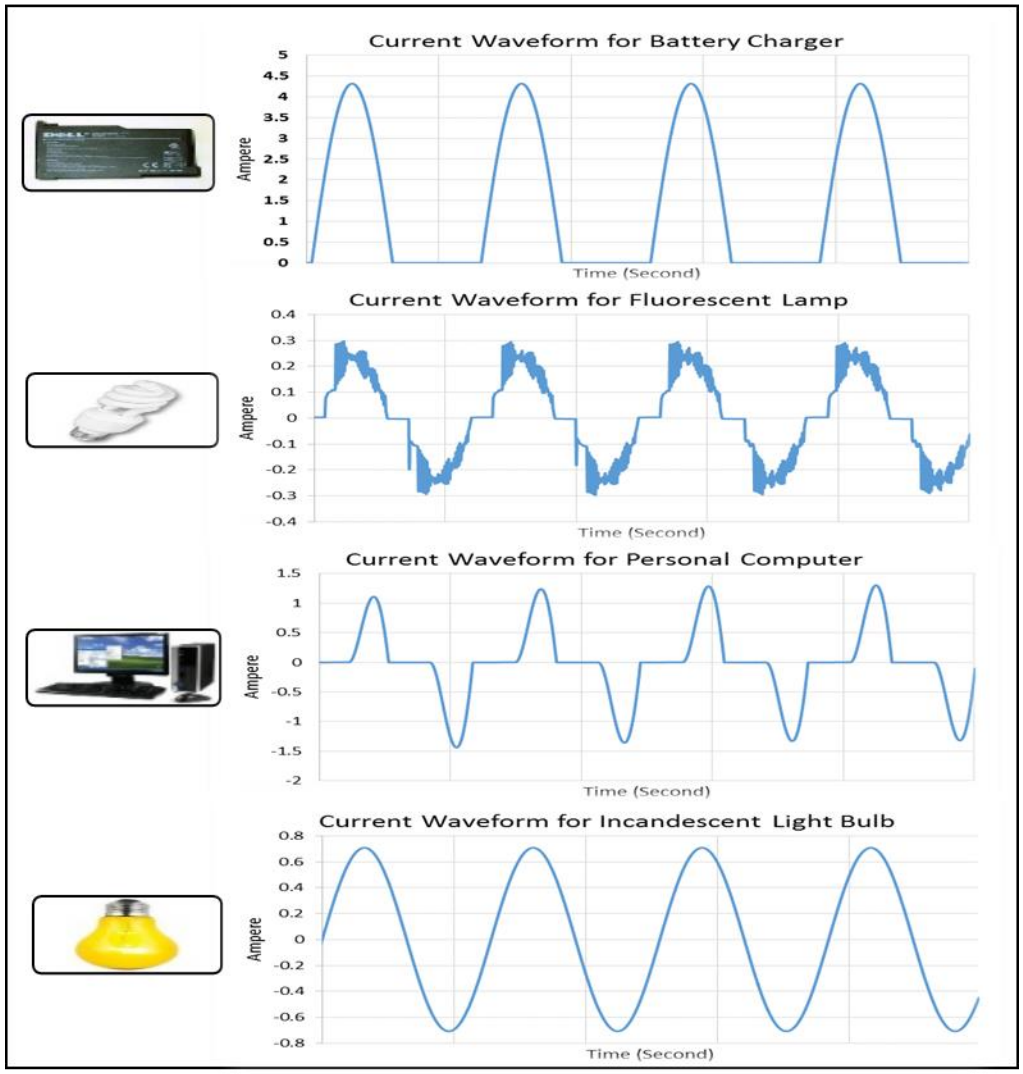

Fig. 4.3: Current waveforms for individual operation.

Table 4.2 Hand verification of each load current in the four-load set-up

Load Type	Measured Current	Calculated Current
Battery Charger	3.05	3.18
Fluorescent lamp	0.21	0.21
Personal Computer	0.92	0.92
Incandescent light bulb	0.50	0.50

Beside the verification for the individual operation for each load, the values for their combinations have been verified. Then, the values of these models have been compared with the [28] and [29], and they matched. As a result, the data set for each load and its combinations are acquired accurately. These four loads have been studied as in figure 4.4

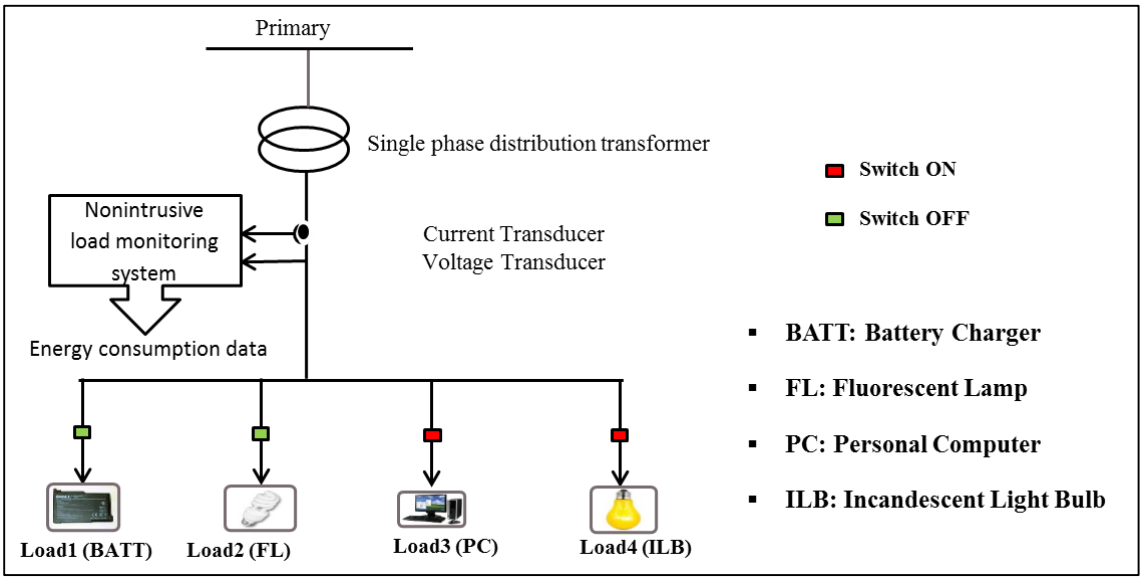

Fig. 4.4: Proposed monitoring system.

After that, the data set will be preprocessing and utilized by wavelet transform. Therefore, the second step is to verify wavelet transform. The energy of the coefficients for different cases have been calculated by hand and compared with those who found by computerization. The results matched.

The final verification is for the machine learning classification. Although the performance for each models has been assessed by DTC using the classification accuracy, the classification accuracy for several cases has been verified by hand.

4.3 Test Cases

The four-load system described earlier is used to generate the data set needed to develop the DT classification model. The process starts by switching on each individual load after 3 seconds while considering all possible combinations of the remaining loads prior to the switching take place. For example, if we consider the battery charger as the load to be switched on, eight cases represent the remaining loads taking all possible combinations as listed in Table 4.3 with the rest of the loads remaining in their states from the beginning of the simulation till the end (i.e., 10 seconds).

Since there are four loads to be switched on, thirty two cases (4 loads × eight cases) are the result of this switching process. This process is repeated but after applying three types of power quality disturbances: 1) Voltage magnitude variation (± 5% in 1% step), 2) frequency variation ranging from 55Hz to 65 Hz in 1Hz step, and 3) harmonic

distortion by adding 5th harmonic ranging from 1% to 5% in 1% step. This brings the total number of cases to 864 cases which is the outcome of the following sum: 11 voltage variation cases × 32 switching cases = 352, 11 frequency variation cases × 32 switching cases = 352, and 5 harmonic distortion cases × 32 switching cases = 160.

The current signals measured at the point of common coupling and obtained from all 864 cases are then used to compute the sample difference to obtain the change in the current and hence the signal X_d. Discrete wavelet transform (DWT) is then applied and the energy of the coefficients for six decomposition levels is computed.

The choice of six wavelet decomposition levels is to ensure that the power system frequency (i.e., 60 Hz) is centered in the approximation level as shown in Table 4.4. The resultant data set consisting of 864 records and 7 attributes (one approximation level and six detail levels) represents the data set to be used for the classification using Decision Tree classifier.

Table 4.3 Switching strategy to generate the data set for the battery load

Cases	Battery	CFL	PC	ILB
1	Load to be switched on at 3 seconds	OFF	OFF	OFF
2		OFF	OFF	ON
3		OFF	ON	OFF
4		OFF	ON	ON
5		ON	OFF	OFF
6		ON	OFF	ON
7		ON	ON	OFF
8		ON	ON	ON

Table 4.4 Wavelet frequency sub-bands for six decomposition levels

Wavelet decomposition level	Frequency sub-band in Hz
d1	3840 – 7680
d2	1920 – 3840
d3	960 – 1920
d4	480 – 960
d5	240 – 480
d6	120 – 240
a6	0 – 120

4.3 Numerical Results

The set up shown in figure 4.1 is used as the test bed to assess the performance of the classification model developed.

4.3.1 Fourier-based Analysis

Table 4.5 lists the classification accuracies obtained after applying the one-against-rest approach in case of using the computed power components (i.e., active, reactive and apparent power) using Fourier transform using the approaches in [1] and [3]. Table 4.5 lists the percentage mean classification accuracy obtained using the power components and the individual load classification accuracies.

Visual inspection of the table reveals that for all positive classes the maximum classification accuracy obtained is 78.08% for the personal computer. On the other hand the mean classification accuracy when considering the four loads is 73.19%.

The main reason for this low classification accuracy is because of the errors introduced by Fourier since it assumes that the analyzed signal is periodic and hence it does not perform well in case of non-periodic signals and hence the performance of the Decision tree classification model would be degraded. This justifies the low classification accuracies of individual loads and also the mean classification accuracy.

Table 4.5 Classification accuracies in percent using one-against-rest approach.

Positive class	Accuracy using actual power
Battery	68.29
CFL	73.97
PC	78.08
LB	72.40
Mean	73.19

4.3.2 Wavelet-based Analysis

The classification accuracies obtained when using different wavelet families to compute the energy of the wavelet coefficients for classification of the four loads in the system shown in figure 4.1 are computed and listed in Tables 4.6 – 4.12.

The tables list the absolute classification accuracies when each load type (e.g. battery charger, fluorescent light, personal computer and incandescent light bulb) is considered as the positive class in the classification process.

The tables also list the mean classification accuracy of the classification model of the four loads for each wavelet basic function.

Table 4.6 Classification accuracies in percent using one-against-rest approach (Daubechies (DB) of orders 1 to 5).

Positive class	DB1	DB2	DB3	DB4	DB5
Battery	99.76	98.61	98.14	97.45	97.45
CFL	94.67	97.22	96.29	96.52	92.12
PC	99.30	98.84	97.45	99.53	95.60
LB	96.06	98.14	96.99	89.35	94.21
Mean	97.45	98.20	97.22	95.71	94.84

Table 4.7 Classification accuracies in percent using one-against-rest approach in transients (Daubechies (DB) of orders 6 to 10)

Positive class	DB6	DB7	DB8	DB9	DB10
Battery	95.83	97.22	99.07	98.84	98.37
CFL	89.35	92.36	96.52	96.29	96.52
PC	98.84	99.76	98.84	98.37	98.37
LB	93.51	94.21	95.60	94.90	95.13
Mean	94.38	95.89	97.51	97.10	97.10

Table 4.8 Classification accuracies in percent using one-against-rest approach in transients (Coiflets (COIF) of orders 1 to 5)

Positive class	COIF1	COIF2	COIF3	COIF4	COIF5
Battery	98.37	98.37	98.37	99.53	95.60
CFL	92.82	92.82	90.50	95.60	96.99
PC	98.84	98.84	98.14	99.30	97.45
LB	93.51	93.51	92.36	96.29	94.90
Mean	95.89	95.89	94.84	97.68	96.23

Table 4.9 Classification accuracies in percent using one-against-rest approach in transients (Symlets (SYM) of orders 1 to 5)

Positive class	SYM1	SYM2	SYM3	SYM4	SYM5
Battery	99.76	98.611	98.14	98.14	98.84
CFL	94.67	97.22	96.29	96.75	96.52
PC	99.30	98.84	97.45	100.00	96.29
LB	96.06	98.14	96.99	96.75	91.89
Mean	97.45	98.20	97.22	97.91	95.89

Table 4.10 Classification accuracies in percent using one-against-rest approach in transients (Symlets (SYM) of orders 6 to 10)

Positive class	SYM6	SYM7	SYM8	SYM9	SYM10
Battery	96.52	96.75	97.45	96.06	95.83
CFL	96.06	90.97	95.13	93.75	95.37
PC	100.00	98.37	99.07	97.91	98.37
LB	93.51	91.20	93.05	95.83	95.13
Mean	96.52	94.32	96.18	95.89	96.18

Table 4.11 Classification accuracies in percent using one-against-rest approach in transients (Biorthogonal (BIOR) of orders 1.3 to 3.5)

Positive class	BIOR1.3	BIOR1.5	BIOR3.1	BIOR3.3	BIOR3.5
Battery	99.76	98.61	97.45	97.45	98.37
CFL	94.67	92.59	94.44	95.37	96.99
PC	99.30	97.22	95.60	96.52	96.06
LB	96.06	95.83	96.99	94.67	95.37
Mean	97.45	96.06	96.12	96.00	96.70

Table 4.12 Classification accuracies in percent using one-against-rest approach in transients (Biorthogonal (BIOR) of orders 3.7 to 6.8)

Positive class	BIOR3.7	BIOR3.9	BIOR4.4	BIOR5.5	BIOR6.8
Battery	98.61	99.07	96.06	96.99	97.68
CFL	96.29	97.45	96.06	93.98	93.98
PC	97.91	98.37	97.68	96.75	98.61
LB	94.90	94.21	94.44	92.12	93.98
Mean	96.93	97.28	96.06	94.96	96.06

Inspection of Tables 4.6 to 4.12 reveals that the best mean overall classification accuracy achieved is 98.20% when using Daubechies of order 2 and Symlets of order 2. On the other hand, in case of each individual load, several wavelets can be identified to perform well and have contributed to improving the classification accuracy.

The results show that in case of battery charger load, Daubechies and Symlets of order 1 provide 99.76% classification accuracy while in case of fluorescent light Biorthogonal 3.9 provides 97.45% classification accuracy. Symlets 4 and Symlets 6 are able to effectively classify the personal computer load at 100% accuracy while Daubechies of order 2 was able to classify the incandescent light bulb at 98.14% accuracy.

The presented results show that Symlets family outperform other wavelets such as Coiflets and Biorthogonal in terms of the mean classification accuracy. On the other

hand, despite both Symlet 2 and Daubechies 2 provide the same mean classification accuracy, Symlets outperform Daubechies in terms of individual load detection and classification which has been observed from the classification accuracies of detecting individual loads. In case of battery charger, for instance, the records are seen as a binary classification problem that includes a positive class which is the battery charger versus the negative class, which is represented by the rest of loads. Symlet 2 is able to detect 108 cases for the positive class and 318 cases for the negative class. These represent the true positive and true negative classification cases, respectively. However, it incorrectly predicted 6 records as a positive class.

4.4 Discussion

The problem of non-intrusive load monitoring can be addressed using Fourier transform or using wavelet transform. In this chapter, both transforms have been used to detect and classify four loads (e.g., battery charger, fluorescent light, personal computer, and incandescent light bulb). Decision tree classier is used to develop the classification model and the mean classification accuracies are computed. Also, the classification accuracies when considering each load as a positive class in the classification process are computed and compared.

The results have shown that the mean classification accuracy obtained using the wavelet transform is significantly higher compared to that obtained using Fourier transform with an absolute difference of 25.01%. This large absolute percentage difference explains the capability of wavelets to handle transients and hence better

detecting and classifying the loads in non-intrusive load monitoring applications. Moreover, since the wavelet library is rich in different wavelet basic functions (e.g. Daubechies, Symlets, Coiflets and Biorthogional) having different wave shape, they can better match the transient pattern as opposed to Fourier which are limited only to the sine and the cosine wave shape.

After investigating the effectiveness of different wavelet families and different wavelet orders, it can be concluded that Symlets wavelet family and in particular Symlets of order 2 can provide the best accuracy in detecting and classifying the loads in the non-intrusive load monitoring application.

5. Conclusion

5.1 Principal Contribution

This thesis presents a new approach using wavelets and machine learning applied to non-intrusive load monitoring. Several Wavelet functions from different wavelet families (i.e., Daubechies, Coiflets, Symlets and Biorthogonal) have been used in the analysis and the results have been evaluated. As a non-intrusive approach, the current signal measured at the point of load interconnection is sampled at 256 samples per cycle and the difference between the current samples is computed so that the change between cycles of the current signal is used for wavelet analysis.

The energy of the wavelet coefficients of the change in the current signal is computed using different wavelet functions that belong to the wavelet families listed earlier. Six wavelet decomposition levels are used and the energy of the wavelet coefficients of the six wavelet decomposition levels are presented to the Decision tree classifier.

In order to automate the classification of the detect load appliance, Decision Tree classifier is used to develop the classification model using the energy of the wavelet coefficients in the six wavelet levels. The Gini index is used to identify the best split at each node of the developed tree among the seven attributes (i.e., one approximation level and six detail levels). Several power quality disturbances have been considered in this study, such as voltage variations, frequency variations and harmonic distortion. The

classification accuracy is used to assess the classification model performance in detecting the correct appliance's operation.

5.2 Conclusion

In this thesis, several test cases have been studied including Fourier transform and wavelet transform as the analysis tool. Also Decision Tree machine learning classifier is used to develop classification models for the cases that have been considered. Four loads representing most common appliances load in electric power system have been considered in this study and a test bed has been modeled using PSCAD/EMTDC commercial software package.

The results of applying the proposed wavelet analysis and machine learning classifier have shown that different classification accuracies can be obtained for different wavelet families and also different wavelet functions. Two types of classification accuracies are used in this thesis to assess the performance of the proposed approach; 1) individual load classification accuracy and 2) overall mean classification accuracy.

The results have shown that the best overall mean classification accuracy achieved is 98.20% when using Daubechies of order 2 and Symlets of order 2. On the other hand, in case of each individual load classification accuracy, several wavelets can be identified to perform well and have contributed to improving the classification accuracy. The results show that in case of battery charger load, Daubechies and Symlets of order 1 provide 99.76% classification accuracy while in case of fluorescent light Biorthogonal 3.9 provides 97.45% classification accuracy. Symlets 4 and Symlets 6 are

able to effectively classify the personal computer load at 100% accuracy while Daubechies of order 2 was able to classify the incandescent light bulb at 98.14% accuracy.

Moreover, in comparison with Fourier transform-based approach in which the power components such as active, reactive and apparent power are used, the maximum classification accuracy obtained is 78.08% for the personal computer. On the other hand the mean classification accuracy when considering the four loads is 73.19%. This large difference in the obtained classification accuracy between the Symlets-based approach and the Fourier-based approach is due to the errors introduced by Fourier since it assumes that the analyzed signal is periodic and hence it does not perform well in case of non-periodic signals.

5.3 Recommendations and Future Work

The work presented in this thesis has shown that the use of wavelet analysis can be more effective compared to Fourier analysis techniques. The main reason is due to the diversity of wavelet function shapes unlike Fourier which is limited only to sine and cosine. Therefore, Wavelet transform and in particular Symlets family has proven to be very useful in non-intrusive appliance load monitoring since it has been shown to achieve both best overall mean and individual load classification accuracies.

Since different Symlets wavelets have shown to provide different individual load classification accuracies, it is recommended as future work to investigate the potential of mixing different Symlets members to improve the classification accuracies. Since in non-intrusive load monitoring different loads may have different transient patterns, it may

be recommended to choose only a subset of the 10 Symlets members to use in the analysis and hence increasing the classification accuracies. It is worth noting that when mixing different Symlets at different orders, the dimension of the feature vector increases which may increase the computational complexity.

The non-intrusive load appliance monitoring may be considered as multi-class problem. The work presented in this thesis uses the one-against-rest approach which treats the multi-class problem as multiple binary classification problem. The main advantage of such approach is its simplicity due to only limiting the number of classes into two (one class positive and one class negative). However, increasing the number of loads results in increased number of classification problems which adds more complexity. It is recommended for future work to apply a multi-class classification approach to the Decision tree classifier.

References

[1] G. W. Hart, "Nonintrusive appliance load monitoring," *Proceedings of the IEEE,* vol. 80, pp. 1870-1891, 1992.

[2] A. Cole and A. Albicki, "Nonintrusive identification of electrical loads in a three-phase environment based on harmonic content," in *Instrumentation and Measurement Technology Conference, 2000. IMTC 2000. Proceedings of the 17th IEEE*, 2000, pp. 24-29.

[3] J. Roos, I. Lane, E. Botha, and G. Hancke, "Using neural networks for non-intrusive monitoring of industrial electrical loads," in *Instrumentation and Measurement Technology Conference, 1994. IMTC/94. Conference Proceedings. 10th Anniversary. Advanced Technologies in I & M., 1994 IEEE*, 1994, pp. 1115-1118.

[4] L. K. Norford and S. B. Leeb, "Non-intrusive electrical load monitoring in commercial buildings based on steady-state and transient load-detection algorithms," *Energy and Buildings*, vol. 24, pp. 51-64, 1996.

[5] M. L. Marceau and R. Zmeureanu, "Nonintrusive load disaggregation computer program to estimate the energy consumption of major end uses in residential buildings," *Energy Conversion and Management*, vol. 41, pp. 1389-1403, 2000.

[6] A. I. Cole and A. Albicki, "Algorithm for nonintrusive identification of residential appliances," in *Circuits and Systems, 1998. ISCAS'98. Proceedings of the 1998 IEEE International Symposium on*, 1998, pp. 338-341.

[7] S. Gupta, M. S. Reynolds, and S. N. Patel, "ElectriSense: single-point sensing using EMI for electrical event detection and classification in the home," in *Proceedings of the 12th ACM international conference on Ubiquitous computing*, 2010, pp. 139-148.

[8] H. Lam, G. Fung, and W. Lee, "A Novel method to construct taxonomy electrical appliances based on load signaturesof," *Consumer Electronics, IEEE Transactions on*, vol. 53, pp. 653-660, 2007.

[9] J. Liang, S. K. Ng, G. Kendall, and J. W. Cheng, "Load signature study—Part I: Basic concept, structure, and methodology," *Power Delivery, IEEE Transactions on*, vol. 25, pp. 551-560, 2010.

[10] A. Marchiori, D. Hakkarinen, Q. Han, and L. Earle, "Circuit-level load monitoring for household energy management," *Pervasive Computing, IEEE*, vol. 10, pp. 40-48, 2011.

[11] A. Zoha, A. Gluhak, M. A. Imran, and S. Rajasegarar, "Non-intrusive load monitoring approaches for disaggregated energy sensing: A survey," *Sensors*, vol. 12, pp. 16838-16866, 2012.

[12] T. Pang-Ning, M. Steinbach, and V. Kumar, "Introduction to data mining," in *Library of Congress*, 2006.

[13] S. B. Leeb, S. R. Shaw, and J. L. Kirtley Jr, "Transient event detection in spectral envelope estimates for nonintrusive load monitoring," *Power Delivery, IEEE Transactions on*, vol. 10, pp. 1200-1210, 1995.

[14] A. I. Cole and A. Albicki, "Data extraction for effective non-intrusive identification of residential power loads," in *Instrumentation and Measurement Technology Conference, 1998. IMTC/98. Conference Proceedings. IEEE*, 1998, pp. 812-815.

[15] H.-H. Chang, H.-T. Yang, and C.-L. Lin, "Load identification in neural networks for a non-intrusive monitoring of industrial electrical loads," in *Computer Supported Cooperative Work in Design IV*, ed: Springer, 2008, pp. 664-674.

[16] H.-H. Chang, "Non-intrusive demand monitoring and load identification for energy management systems based on transient feature analyses," *Energies*, vol. 5, pp. 4569-4589, 2012.

[17] S. R. Shaw, S. B. Leeb, L. K. Norford, and R. W. Cox, "Nonintrusive load monitoring and diagnostics in power systems," *Instrumentation and Measurement, IEEE Transactions on*, vol. 57, pp. 1445-1454, 2008.

[18] M. Zeifman and K. Roth, "Nonintrusive appliance load monitoring: Review and outlook," *Consumer Electronics, IEEE Transactions on*, vol. 57, pp. 76-84, 2011.

[19] D. He, W. Lin, N. Liu, R. G. Harley, and T. G. Habetler, "Incorporating Non-Intrusive Load Monitoring Into Building Level Demand Response," *Smart Grid, IEEE Transactions on*, vol. 4, pp. 1870-1877, 2013.

[20] Z. Wang and G. Zheng, "Residential appliances identification and monitoring by a nonintrusive method," *Smart Grid, IEEE Transactions on*, vol. 3, pp. 80-92, 2012.

[21] G. Hoogsteen, J. O. Krist, V. Bakker, and G. J. Smit, "Non-intrusive appliance recognition," in *Innovative Smart Grid Technologies (ISGT Europe), 2012 3rd IEEE PES International Conference and Exhibition on*, 2012, pp. 1-7.

[22] H.-H. Chang, K.-L. Chen, Y.-P. Tsai, and W.-J. Lee, "A new measurement method for power signatures of nonintrusive demand monitoring and load identification," *Industry Applications, IEEE Transactions on,* vol. 48, pp. 764-771, 2012.

[23] J. Froehlich, E. Larson, S. Gupta, G. Cohn, M. Reynolds, and S. Patel, "Disaggregated end-use energy sensing for the smart grid," *IEEE Pervasive Computing,* vol. 10, pp. 28-39, 2011.

[24] C. J. Burges, "A tutorial on support vector machines for pattern recognition," *Data mining and knowledge discovery,* vol. 2, pp. 121-167, 1998.

[25] H. Chang, K. Lian, Y. Su, and W. Lee, "Power Spectrum-Based Wavelet Transform for Non-Intrusive Demand Monitoring and Load Identification," 2013.

[26] C. Laughman, K. Lee, R. Cox, S. Shaw, S. Leeb, L. Norford, *et al.*, "Power signature analysis," *Power and Energy Magazine, IEEE,* vol. 1, pp. 56-63, 2003.

[27] L. Olshen and C. J. Stone, "Classification and regression trees," *Wadsworth International Group,* 1984.

[28] C. Venkatesh, D. S. Kumar, D. S. Sarma, and M. Sydulu, "Modelling of nonlinear loads and estimation of harmonics in industrial distribution system," in *Fifteenth National Power Systems Conference (NPSC), IIT Bombay*, 2008, pp. 592-597.

[29] P. R. Nasini, N. R. Narra , and A. Santosh, "Modeling and harmonic analysis of domestic/industrial loads," in *International Journal of Engineering Research and Application* 2012, pp. 485-491.

Appendix A

Decision Tree Classifier (DTC) is considered as a binary classifier that works by assigning a class label for each leaf node based on features of the root and internal nodes. Assuming we have instances belong to two classes as in figure A.1 and we want to apply DTC on instances in the dotted oval at the same figure.

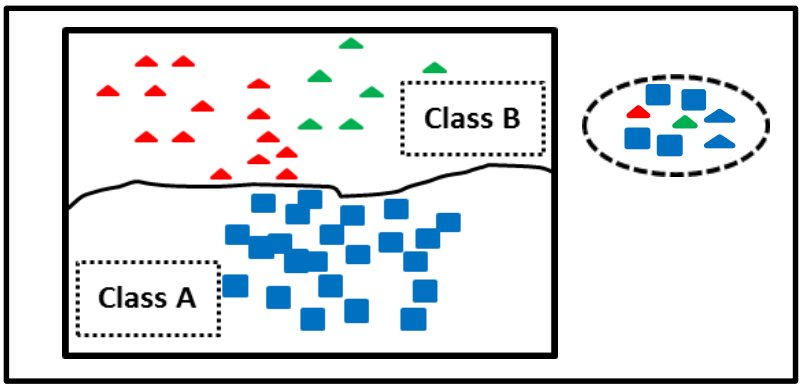

Fig. A.1: Instances for classification.

These seven instances would be classified based on the best split among attributes that gives the lowest node impurity measured by Gini index

$$Gini(t) = 1 - \sum_{m=0}^{c-1} [p(m|t)]^2 \qquad \text{(A.1)}$$

Where $p(m|t)$ represents the relative frequency of class m at node t.

Where the Gini index for the best split is calculated as

$$Gini_{split} = \sum_{i=1}^{k} \frac{n_i}{n} Gini(i) \qquad \text{(A.2)}$$

where, n_i is number of records at child I, and the total number of records at parent node is represented by n.

These instances can be classified as in figure A.2.

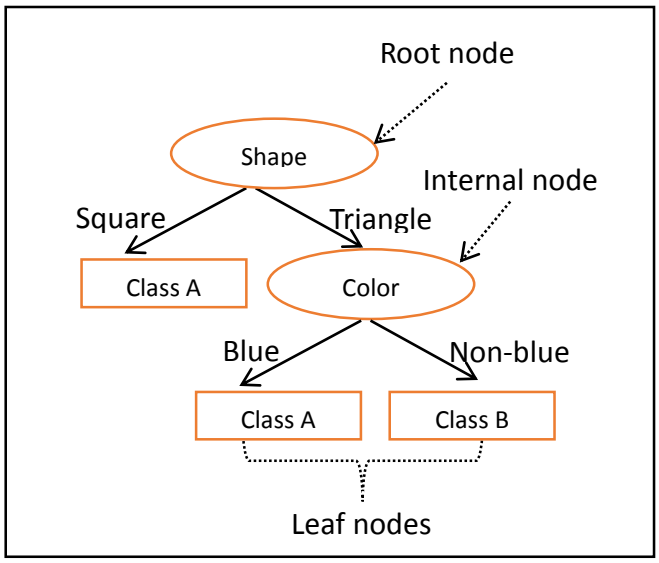

Fig. A.2: Splitting attributes.

Based on the shape, the instances can be discriminated as four squares and four triangles. Then, $Gini$ and $Gini_{split}$ equal

$$Gini = 1 - (\frac{4}{8})^2 - (\frac{4}{8})^2 = 0.5$$

$$Gini_{split} = \left(0.5 * \frac{4}{8}\right) + \left(0.5 * \frac{4}{8}\right) = 0.5$$

Based on the color, it can be seen as six blue instances and two non-blue. Therefore, $Gini$ and $Gini_{split}$ are 0.375. Therefore, based on the measure of impurity, the instances should be divided using the color because the aim is to reduce the impurity.

Appendix B

In 1D Discrete Wavelet Transform (DWT), signals are analyzed based on orthogonal vectors into approximations and details. Then, the approximations can be further decomposed into two sub-signals and so on. Figure B.1 explains how the discrete time domain signal decomposes. Theses orthogonal vectors are the wavelet function and the scaling function. Approximations and details are computed by taking the inner product of the signal and the scaling and wavelet coefficients, respectively. The approximations represent the low-pass filter and the details represent the high-pass filters.

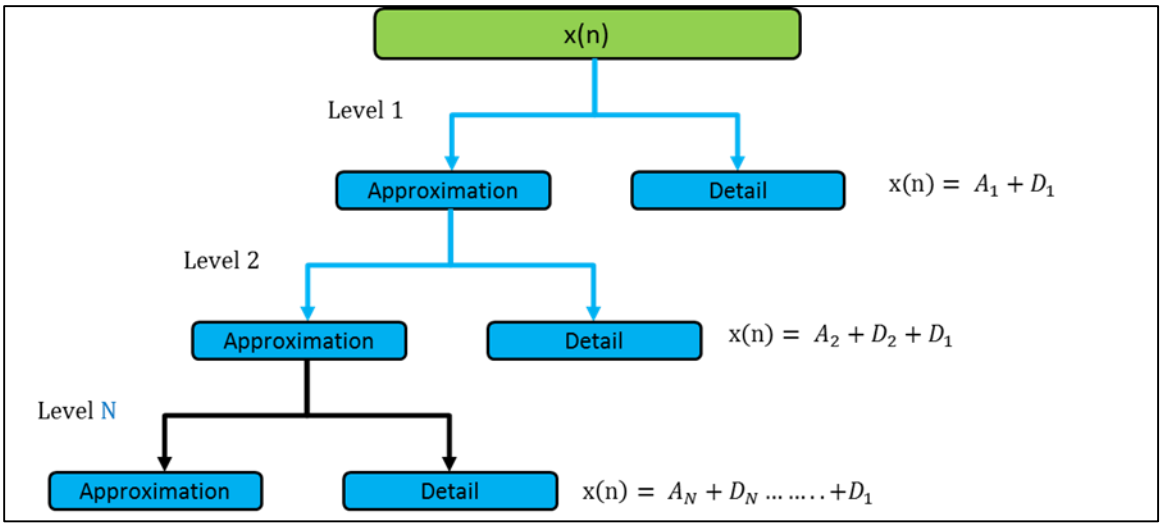

Fig. B.1: Analyzing signal using DWT.

The maximum level of the analysis is determine based on B.1.

$$Level_{max} = \frac{\log(n)}{\log(2)} \qquad \text{(B.1)}$$

Where n is the number of sample of each signal.

Several wavelet families have been utilized in the literature for different applications; however, for the simplicity, Daubechies of order 1 (Db1) is used to explain how wavelet transom works.

In Db1, the coefficients of scaling function and for the wavelet function are

$$\emptyset = (\frac{1}{\sqrt{2}}, \frac{1}{\sqrt{2}}) \qquad \text{(B.2)}$$

$$\phi = (\frac{1}{\sqrt{2}}, \frac{-1}{\sqrt{2}}) \qquad \text{(B.3)}$$

Assume x is a vector and represented by 16 values

$$x = (3, 2, 7, 6, 14, 3, 6, 5, 41, 23, 7, 3, 8, 9, 5, 4)$$

To find the approximation at the first level, we take the inner product between each pairs of the discrete time signal and the scaling function.

$$A_1 = \left(\frac{3+2}{\sqrt{2}}, \frac{7+6}{\sqrt{2}}, \frac{14+3}{\sqrt{2}}, \frac{6+5}{\sqrt{2}}, \frac{41+23}{\sqrt{2}}, \frac{7+3}{\sqrt{2}}, \frac{8+9}{\sqrt{2}}, \frac{5+4}{\sqrt{2}}\right)$$

$$= (\frac{5\sqrt{2}}{2}, \frac{13\sqrt{2}}{2}, \frac{17\sqrt{2}}{2}, \frac{11\sqrt{2}}{2}, 32\sqrt{2}, 5\sqrt{2}, \frac{17\sqrt{2}}{2}, \frac{9\sqrt{2}}{2})$$

To compute the energy for the approximation at the first level

$$\mathrm{E}_{\mathrm{A1}} = (\frac{5\sqrt{2}}{2})^2 + (\frac{13\sqrt{2}}{2})^2 + (\frac{17\sqrt{2}}{2})^2 + (\frac{11\sqrt{2}}{2})^2 + (32\sqrt{2})^2 + (5\sqrt{2})^2$$

$$+ (\frac{17\sqrt{2}}{2})^2 + (\frac{9\sqrt{2}}{2})^2 = 2585$$

Likewise, to find the detail at the first level, we take the inner product between each pairs of the discrete time signal and the wavelet function.

$$D_1 = \left(\frac{3-2}{\sqrt{2}}, \frac{7-6}{\sqrt{2}}, \frac{14-3}{\sqrt{2}}, \frac{6-5}{\sqrt{2}}, \frac{41-23}{\sqrt{2}}, \frac{7-3}{\sqrt{2}}, \frac{8-9}{\sqrt{2}}, \frac{5-4}{\sqrt{2}}\right)$$

$$= (\frac{\sqrt{2}}{2}, \frac{\sqrt{2}}{2}, \frac{11\sqrt{2}}{2}, \frac{\sqrt{2}}{2}, 9\sqrt{2}, 2\sqrt{2}, \frac{-\sqrt{2}}{2}, \frac{\sqrt{2}}{2})$$

To find the energy for the detail at the first level

$$\mathrm{E_{D1}} = (\frac{\sqrt{2}}{2})^2 + (\frac{\sqrt{2}}{2})^2 + (\frac{11\sqrt{2}}{2})^2 + (\frac{\sqrt{2}}{2})^2 + (9\sqrt{2})^2 + (2\sqrt{2})^2 + (\frac{-\sqrt{2}}{2})^2$$

$$+ (\frac{\sqrt{2}}{2})^2 = 233$$

Then, the approximation at the first level is decomposed to find the approximation and the detail at the second level as following:

$$A_2 = \left(\frac{(5+13)\sqrt{2}}{2\sqrt{2}}, \frac{(17+11)\sqrt{2}}{2\sqrt{2}}, \frac{(32+5)\sqrt{2}}{2\sqrt{2}}, \frac{(17+9)\sqrt{2}}{2\sqrt{2}}, \right) = (9, 14, 37, 13)$$

$$\mathrm{E_{A2}} = (9)^2 + (14)^2 + (37)^2 + (13)^2 = 1815$$

$$D_2 = \left(\frac{(5-13)\sqrt{2}}{2\sqrt{2}}, \frac{(17-11)\sqrt{2}}{2\sqrt{2}}, \frac{(32-5)\sqrt{2}}{2\sqrt{2}}, \frac{(17-9)\sqrt{2}}{2\sqrt{2}}, \right) = (-4, 3, \frac{27}{2}, 4)$$

$$\mathrm{E_{D2}} = (-4)^2 + (3)^2 + (\frac{27}{2})^2 + (4)^2 = 223.25$$

The maximum level of decomposition depends on the length of the vector. In this example, the vector can be analyzed at three level of decomposition.